DOCUMENT DATA FORM **Your Name: Nick Carino**

Document Title or Description (max. 254 characters): Circle: Same as cover (or fill in below)

Drawing Book 8 Chapter 5: Various details – Slurry wall – drawings 8-JK5-1 to 8-JK5-23

Include work order no. and floor no. if applicable

Roll # DB03	Doc. ID (report #, dwg. #):

Document Date: 1968-71	Document Author Name:	Author Organization: SHC&R

KEYWORDS – HIGHLIGHT ALL THAT APPLY –

Level 1

Bankers Trust	Project 4	WTC 1 - North Tower	Add
Below Grade	Project 5	WTC 2 - South Tower	
Concourse	Project 6	WTC 3 - Marriot Hotel	
Electrical Substation	Project 7	WTC 4 - South Plaza Bldg.	
Liberty Plaza	Project 8	WTC 5 - North Plaza Bldg	
PATH Station	WFC 1 - Oppenhiemer Dow	WTC 6 - Customs House	
PATH Terminal	WFC 2 - Tower B	WTC 7	
Project 1	WFC 3 - American Express	(WTC Complex)	
Project 2	WFC 4 - Tower D	WTC Plaza	
Project 3			

Level 2

Accident analysis & risk	Fire protection	Misc. Performance Problems	(Structural)
Architectural	Fire service	News coverage	Tenant alterations
Data request	Landscaping	Police	Tenant Space
Emergency management	Management	Security	Add
Evacuation	Mech./elec.		

Level 3

1993 explosion	Cranes	Frame	Roof	Weight
A/E fitout	Criteria	Frame analysis	Safety	Weld detail
A-242	Dampers	Frequency	Schedule	Weld size
A-36	Debris	Fuel	Sculpture	Welding
A-497	Deck	Furniture layout	Security system	Wind
Aircraft impact	Deflection	Generators	Shear knuckle	Windows
Air cooled condensers	Demolition	Guidelines	Shear test	Yield strength
Analysis	Design	Gypsum board	Shear Stud	Add
Angles	(Detailing)	Hat truss	Shop drawings	(Drawing books)
Antenna	Doors	Human comfort	Shortening	
Artifacts	Drawings	HVAC	Slab	
Asbestos	Eastern States Steel	Index	(Slurry wall)	
Base plate	Egress	Inspection	Smoke control	
(Beams)	Elevator	Insulation	Smoke test	
Bid documents	Elevator Shaft	Job number	Spandrel beam	
Bid Invitation	Emergency	Joist	Specifications	
Bow tie	communications	L-50	Splices	
Bracing	Equipment	Lighting	Sprinkler	
Bridging truss	Erection marks	Loads	Stability	
Building code	Errors & Omissions	Maintenance	Stairways	
Calculations	Escalator	Marking	Standards	
Carpet	Expansion joint	Mesh reinforcement	Steel	
Ceilings	Exterior columns	Mill inspection	Steel composition	
Certification	Fabrication	Model	Stiffness	
Chillers	Family member	Mullion	Structural review	
Cladding	Field survey	Operations	Surveillance	
Collapse	Fire alarms	Paint	Survey	
Columns	Fireproofing	Partition layout	Survivor	
Communication systems	Fire spread	Partitions	Tenant list	
Composite truss	Fire testing	Photos	Tenant occupancy	
Computer output	Firetower	Pipes	Testing	
Computer program	Flag Pole	Plumbing	Tie	
Concrete	Flammability	Prestressing	Tolerances	
Connections	Floor	Probability, uncertainty	Transfer Girders	
Construction	Floor load	Quality control	Triad	
Contract	Floor slab	Ramp	Truss	
Core beams	Floor system	Reinforcing (strengthening)	Vestibule	
Core columns	Floor trusses	Renovation	Vibration	
Corrosion	Formwork	Repair	Walls	
Cracking	Foundations	Research & Development	Water supply	
	Fracture		Weather	

WTCI-1067-LERA

SKILLING, HELLE, CHRISTIANSEN, ROBERTSON Structural & Civil Engineers

PROJECT	TITLE	DATE
THE WORLD TRADE CENTER	CONCRETE TYPICAL DETAILS SLABS & BEAMS - INDEX	9/ 1/70

REVISIONS

SUPERSEDES B-JK5-1

8-JK5- 1.1 INDEX
8-JK5- 1.2 INDEX
8-JK5- 2 DETAILS AT SLURRY WALL
8-JK5- 2.1 DETAILS AT SLURRY WALL
8-JK5- 2.2 DETAILS AT SLURRY WALL
8-JK5- 2.3 DETAILS AT SLURRY WALL
8-JK5- 2.4 DETAILS AT SLURRY WALL
8-JK5- 2.5 DETAILS AT SLURRY WALL
8-JK5- 2.6 DETAILS AT SLURRY WALL
8-JK5- 2.7 DETAILS AT SLURRY WALL
8-JK5- 2.8 DETAILS AT SLURRY WALL
8-JK5- 2.9 DETAILS AT SLURRY WALL
8-JK5- 2.10 DETAILS AT SLURRY WALL
8-JK5- 2.11 DETAILS AT SLURRY WALL
8-JK5- 2.12 DETAILS AT SLURRY WALL
8-JK5- 3.1 FLAT SLAB-WITH DROP PANELS
8-JK5- 3.2 FLAT SLAB-WITHOUT DROP PANELS
8-JK5- 3.3 REINFORCEMENT OVER COLUMN SHEAR HEADS
8-JK5- 4.1 ONE WAY SLAB OVER CONCRETE STRUCTURE
8-JK5- 4.2 ONE WAY SLAB OVER STEEL STRUCTURE
8-JK5- 4.3 ONE WAY SLAB OVER STEEL STRUCTURE
8-JK5- 5.1 ONE WAY SLAB WITH WWF
8-JK5- 5.2 ONE WAY SLAB WITH WWF
8-JK5- 6 CONSTRUCTION JOINT FOR FLAT SLAB
8-JK5- 7.1 ONE WAY SLAB SCHEDULE
8-JK5- 7.2 ONE WAY SLAB SCHEDULE
8-JK5- 7.3 ONE WAY SLAB SCHEDULE
8-JK5- 8 NOT USED
8-JK5- 9 ENCASEMENT OF COLUMN BASE PLATES
8-JK5- 10.1 SLAB ON GRADE
8-JK5- 10.2 SLAB ON GRADE
8-JK5- 10.3 SLAB ON GRADE
8-JK5- 10.4 SLAB ON GRADE
8-JK5- 10.5 SLAB ON GRADE
8-JK5- 10.6 SLAB ON GRADE
8-JK5- 11.1 COLUMN SHEAR HEAD DETAILS
8-JK5- 11.2 COLUMN SHEAR HEAD DETAILS
8-JK5- 11.3 COLUMN SHEAR HEAD DETAILS
8-JK5- 11.4 COLUMN SHEAR HEAD DETAILS
8-JK5- 11.5 COLUMN SHEAR HEAD DETAILS
8-JK5- 12 CONCRETE FILL OVER STRUCTURAL SLAB
8-JK5- 13 COLUMN BASE PLATE AT TRUCK RAMP
8-JK5- 14.1 TEMPORARY EXPANSION JOINT
8-JK5- 14.2 TEMPORARY EXPANSION JOINT
8-JK5- 14.3 TEMPORARY CONSTRUCTION JOINT
8-JK5- 14.4 TEMPORARY EXPANSION JOINT
8-JK5- 14.5 TEMPORARY EXPANSION JOINT
8-JK5- 14.6 TEMPORARY EXPANSION JOINT
8-JK5- 14.7 TEMPORARY EXPANSION JOINT
8-JK5- 15 PROTECTION SLAB EL.310

SKILLING, HELLE, CHRISTIANSEN, ROBERTSON *Structural & Civil Engineers*

PROJECT	TITLE	DATE
THE WORLD TRADE CENTER	CONCRETE TYPICAL DETAILS SLABS & BEAMS - INDEX	9/ 1/70

REVISIONS

8-JK5- 16 WORK PLATFORM LOCATIONS EL.310
8-JK5- 17 CONCRETE MIX DIVISION LINES EL.310
8-JK5- 18 NOT USED
8-JK5- 19 NOT USED
8-JK5- 20 NOT USED
8-JK5- 21 CONCRETE BEAM DETAILS
8-JK5- 22.1 CONCRETE BEAM SCHEDULE
8-JK5- 22.2 CONCRETE BEAM SCHEDULE
8-JK5- 22.3 CONCRETE BEAM SCHEDULE
8-JK5- 22.4 CONCRETE BEAM SCHEDULE
8-JK5- 22.5 CONCRETE BEAM SCHEDULE
8-JK5- 22.6 CONCRETE BEAM SCHEDULE
8-JK5- 22.7 CONCRETE BEAM SCHEDULE
8-JK5- 22.27 CONCRETE BEAM SCHEDULE
8-JK5- 22.29 CONCRETE BEAM SCHEDULE
8-JK5- 22.30 CONCRETE BEAM SCHEDULE
8-JK5- 22.31 CONCRETE BEAM SCHEDULE
8-JK5- 22.32 CONCRETE BEAM SCHEDULE
8-JK5- 22.33 CONCRETE BEAM SCHEDULE
8-JK5- 22.52 CONCRETE BEAM SCHEDULE
8-JK5- 22.54 CONCRETE BEAM SCHEDULE
8-JK5- 22.56 CONCRETE BEAM SCHEDULE
8-JK5- 22.57 CONCRETE BEAM SCHEDULE
8-JK5- 22.58 CONCRETE BEAM SCHEDULE
8-JK5- 22.60 CONCRETE BEAM SCHEDULE
8-JK5- 22.62 CONCRETE BEAM SCHEDULE
8-JK5- 22.64 CONCRETE BEAM SCHEDULE
8-JK5- 22.65 CONCRETE BEAM SCHEDULE
8-JK5- 22.67 CONCRETE BEAM SCHEDULE
8-JK5- 22.68 CONCRETE BEAM SCHEDULE
8-JK5- 22.69 CONCRETE BEAM SCHEDULE
8-JK5- 22.70 CONCRETE BEAM SCHEDULE
8-JK5- 22.71 CONCRETE BEAM SCHEDULE
8-JK5- 22.73 CONCRETE BEAM SCHEDULE
8-JK5- 22.79 CONCRETE BEAM SCHEDULE
8-JK5- 22.81 CONCRETE BEAM SCHEDULE
8-JK5- 22.83 CONCRETE BEAM SCHEDULE
8-JK5- 22.85 CONCRETE BEAM SCHEDULE
8-JK5- 22.87 CONCRETE BEAM SCHEDULE
8-JK5- 22.89 CONCRETE BEAM SCHEDULE
8-JK5- 23 CONCRETE FIREPROOFING DETAIL

SKILLING, HELLE, CHRISTIANSEN, ROBERTSON — Structural & Civil Engineers

PROJECT: THE WORLD TRADE CENTER | TITLE: TYPICAL DETAIL OF SLAB AT SLURRY WALL | DATE: 5-1-68

REVISIONS
2-6-69
4-2-69
4-9-69

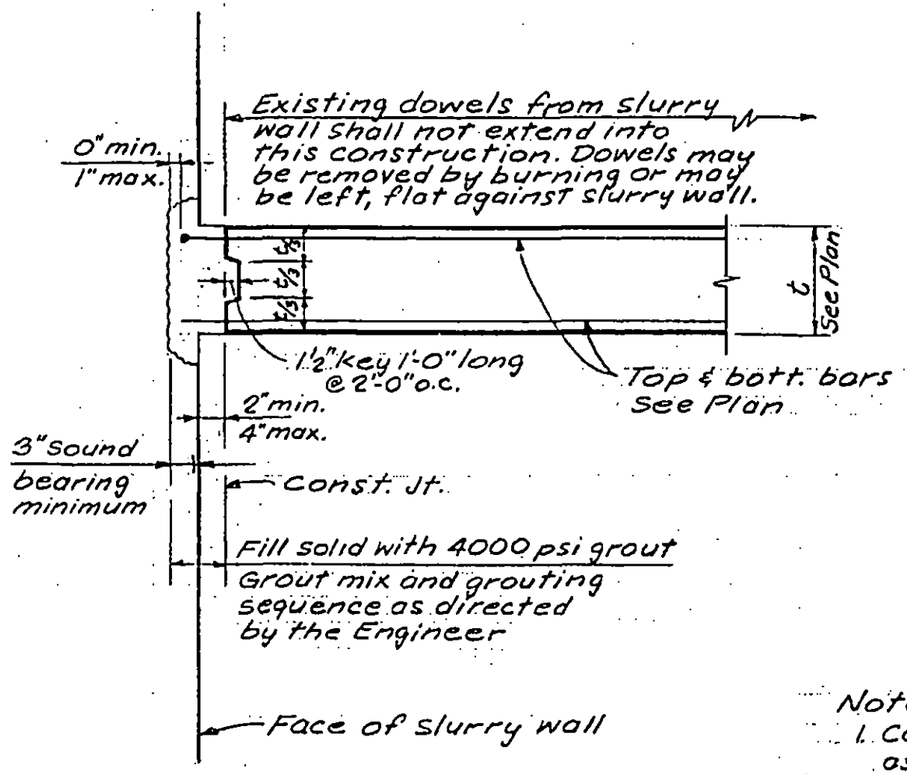

Notes:
1. Contractor shall deepen existing keys as required to obtain full bearing to the depth indicated in the drawings.
2. If required to obtain indicated bearing, keys shall be extended behind existing reinforcing steel within the slurry wall.
3. Contractor shall clean all loose or fractured material from within the key to expose sound concrete.
4. For slab at El. 253', see detail on 8-JK5-2.1

LICENSED PROFESSIONAL ENGINEER — LESLIE E. ROBERTSON — No. 34360 — UNIVERSITY OF THE STATE OF NEW YORK

DESIGNED

DRAWN S.C.

REVIEWED E.L. & L.E.R.

8-JK5-2

SKILLING, HELLE, CHRISTIANSEN, ROBERTSON — Structural & Civil Engineers

PROJECT: THE WORLD TRADE CENTER | TITLE: TYPICAL DETAIL OF EL. 253 SLAB AT SLURRY WALL | DATE: 2-6-69

REVISIONS

2-13-69

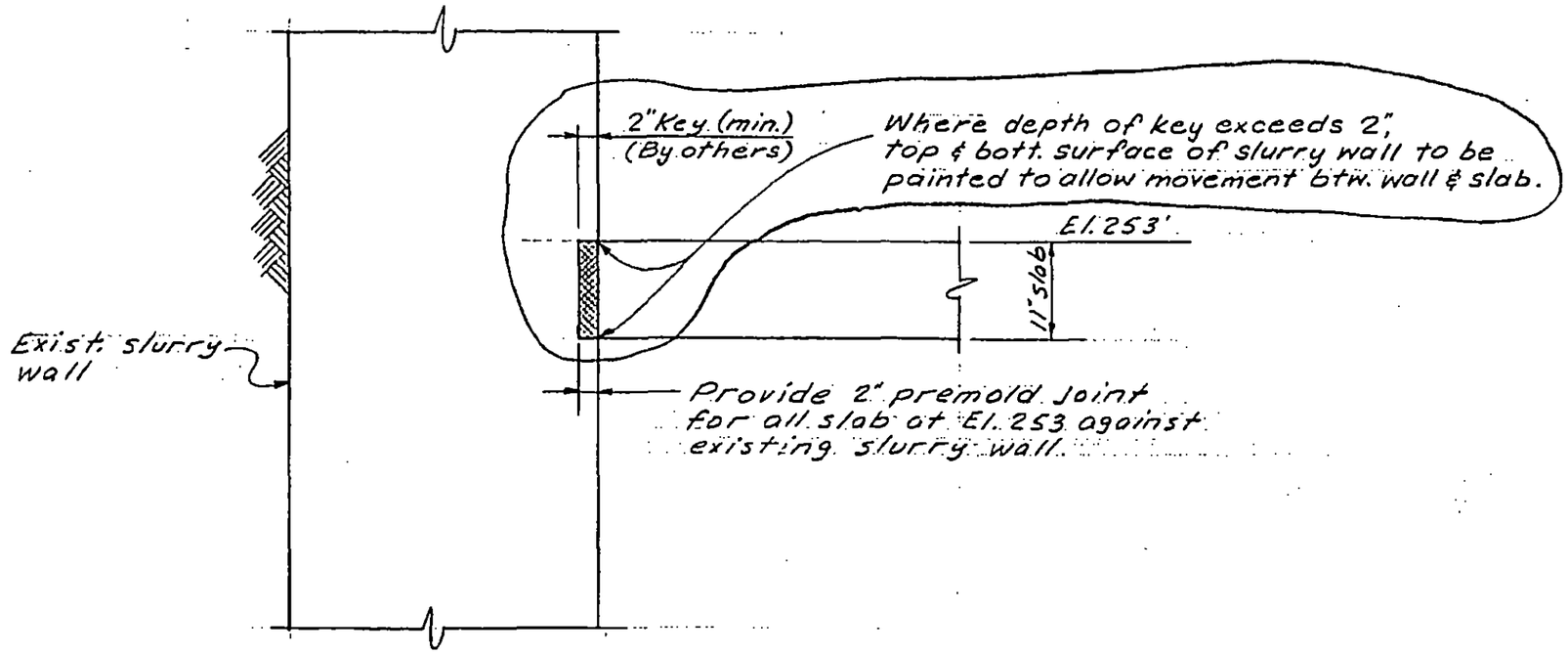

LICENSED PROFESSIONAL ENGINEER
LESLIE E. ROBERTSON
No. 34360
UNIVERSITY OF THE STATE OF NEW YORK

DESIGNED

DRAWN
A.F.

REVIEWED
E.L.

8-JKS-2.1

SKILLING, HELLE, CHRISTIANSEN, ROBERTSON — Structural & Civil Engineers

PROJECT: THE WORLD TRADE CENTER | TITLE: TYPICAL DET. OF CONCRETE BEAM AT SLURRY WALL | DATE: 3-28-69

REVISIONS

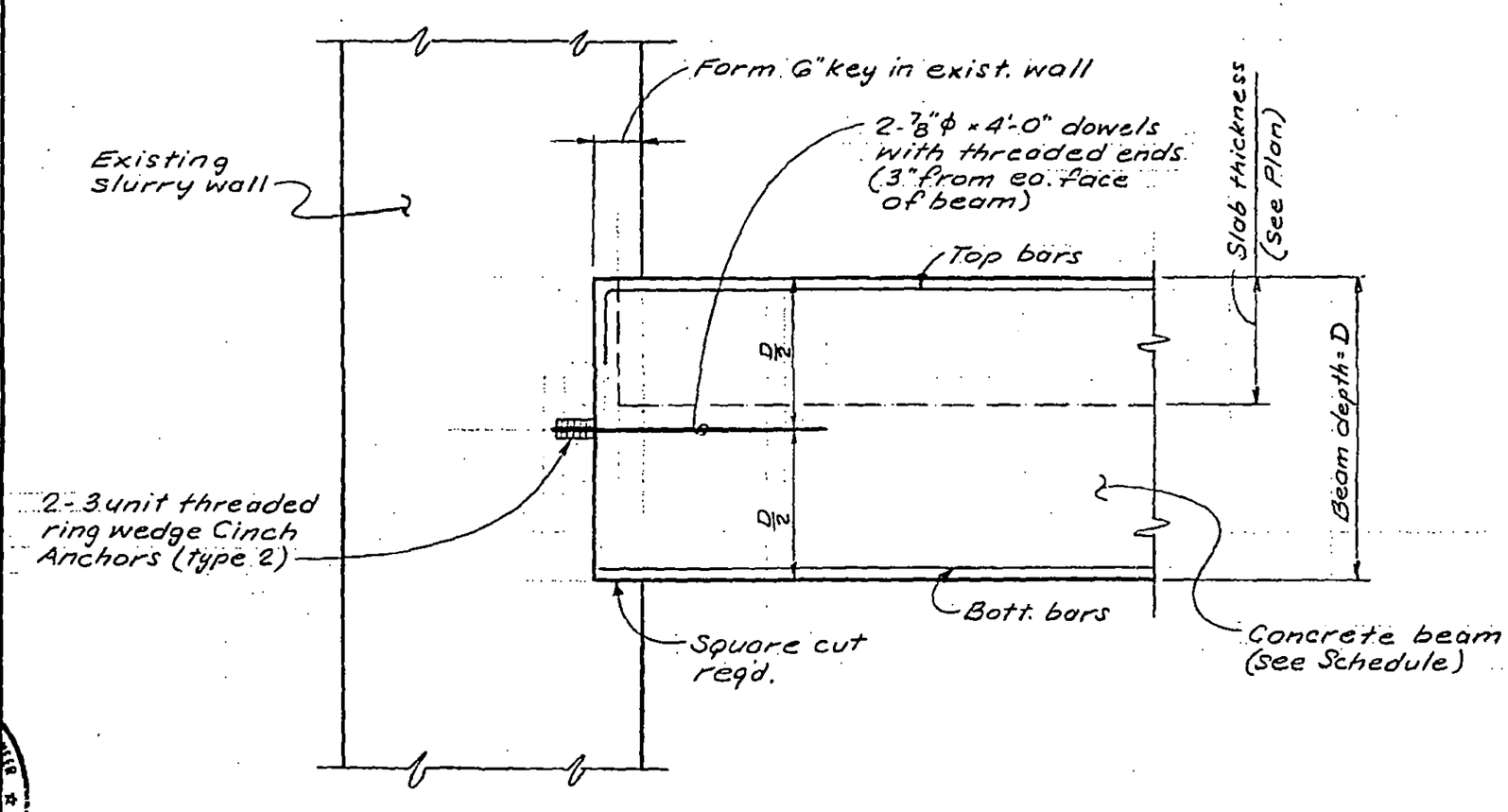

LICENSED PROFESSIONAL ENGINEER — LESLIE E. ROBERTSON — No. 34360 — UNIVERSITY OF [illegible]

DESIGNED

DRAWN S.C.

REVIEWED E.L.

SKILLING - HELLE - CHRISTIANSEN - ROBERTSON Structural & Civil Engineers

PROJECT THE WORLD TRADE CENTER | TITLE TYPICAL DETAIL OF SLAB AT SLURRY WALL | DATE 4-9-69

REVISIONS

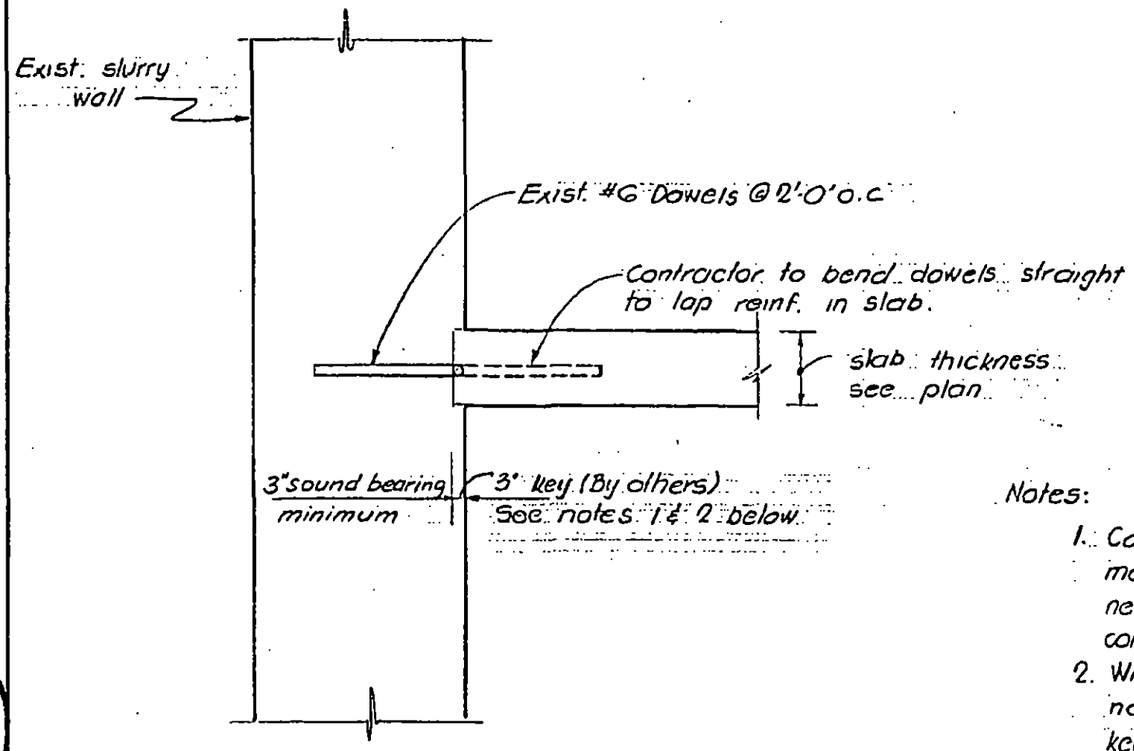

Notes:

1. Contractor to clean & chip-off all loose materials from keys provided by others where necessary, to further cut the keys to sound concrete.
2. Where keys are not provided or could not be found, contractor to cut new keys to the size as shown to sound concrete then install 3 unit threaded cinch anchors (type 2) @ 2'-0" o.c. with $\frac{3}{4}$"ϕ x 3'-6" Dowels (A-432)

LICENSED PROFESSIONAL ENGINEER
LESLIE E. ROBERTSON
No. 34360
UNIVERSITY OF THE STATE OF NEW YORK

DRAWN S.C.
REVIEWED E.L.

8-JK5-2.3

SKILLING, HELLE, CHRISTIANSEN, ROBERTSON — Structural & Civil Engineers

PROJECT: THE WORLD TRADE CENTER | TITLE: TYP. CONSTRUCTION JOINT BTW. SLAB & SLURRY WALL | DATE: 4-29-69

REVISIONS
5-26-69
3-2-70
4-24-70

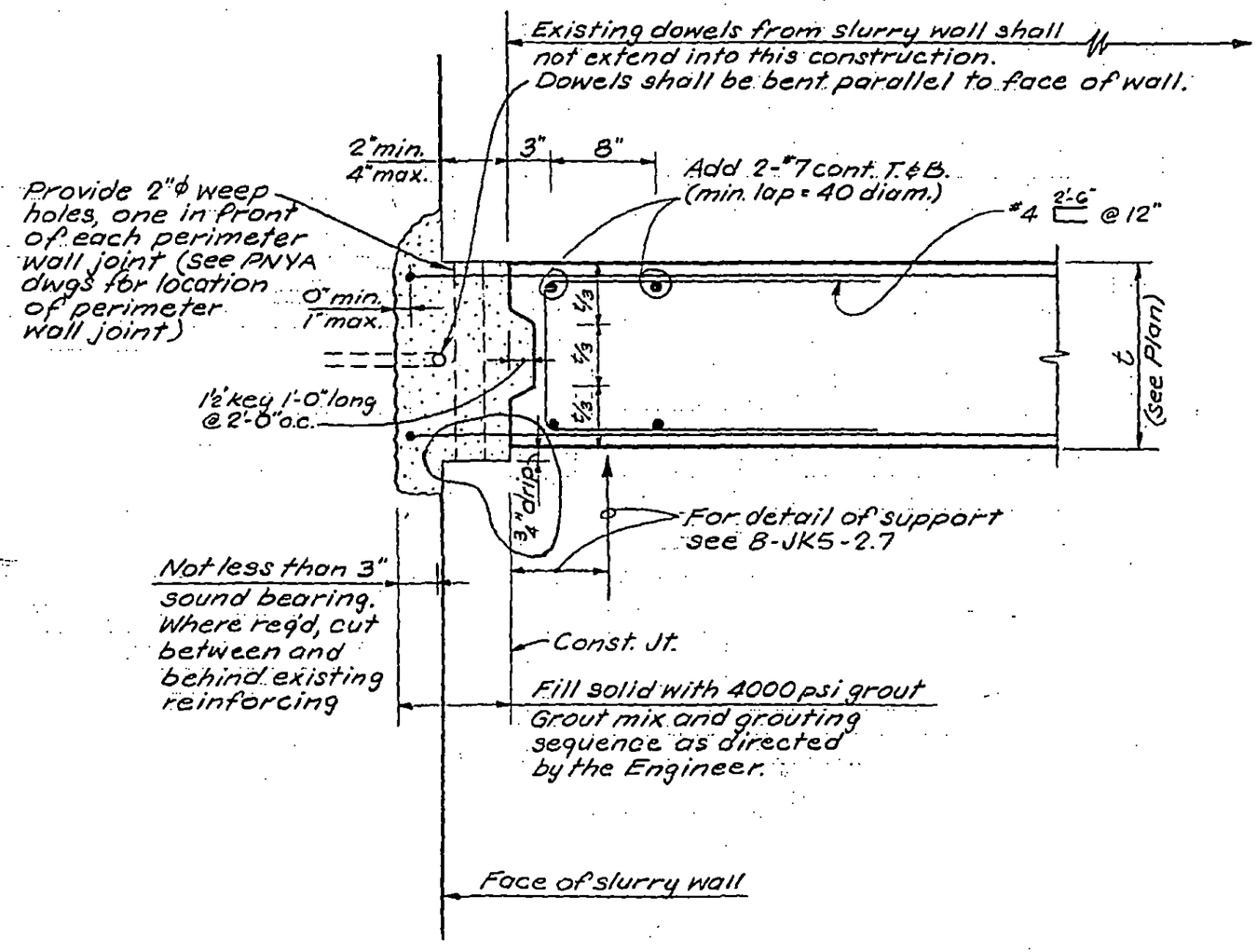

LICENSED PROFESSIONAL ENGINEER
LESLIE E. ROBERTSON
No. 34360
UNIVERSITY OF THE STATE OF NEW YORK

DESIGNED

DRAWN
S.C.

REVIEWED
E.L.

8-JK5-2.4

SKILLING, HELLE, CHRISTIANSEN, ROBERTSON — Structural & Civil Engineers

PROJECT: THE WORLD TRADE CENTER | TITLE: TYP. DET. OF "SLIP-JOINT" BTW. SLAB & SLURRY WALL-TYPE A | DATE: 4-29-69

REVISIONS

5-26-69

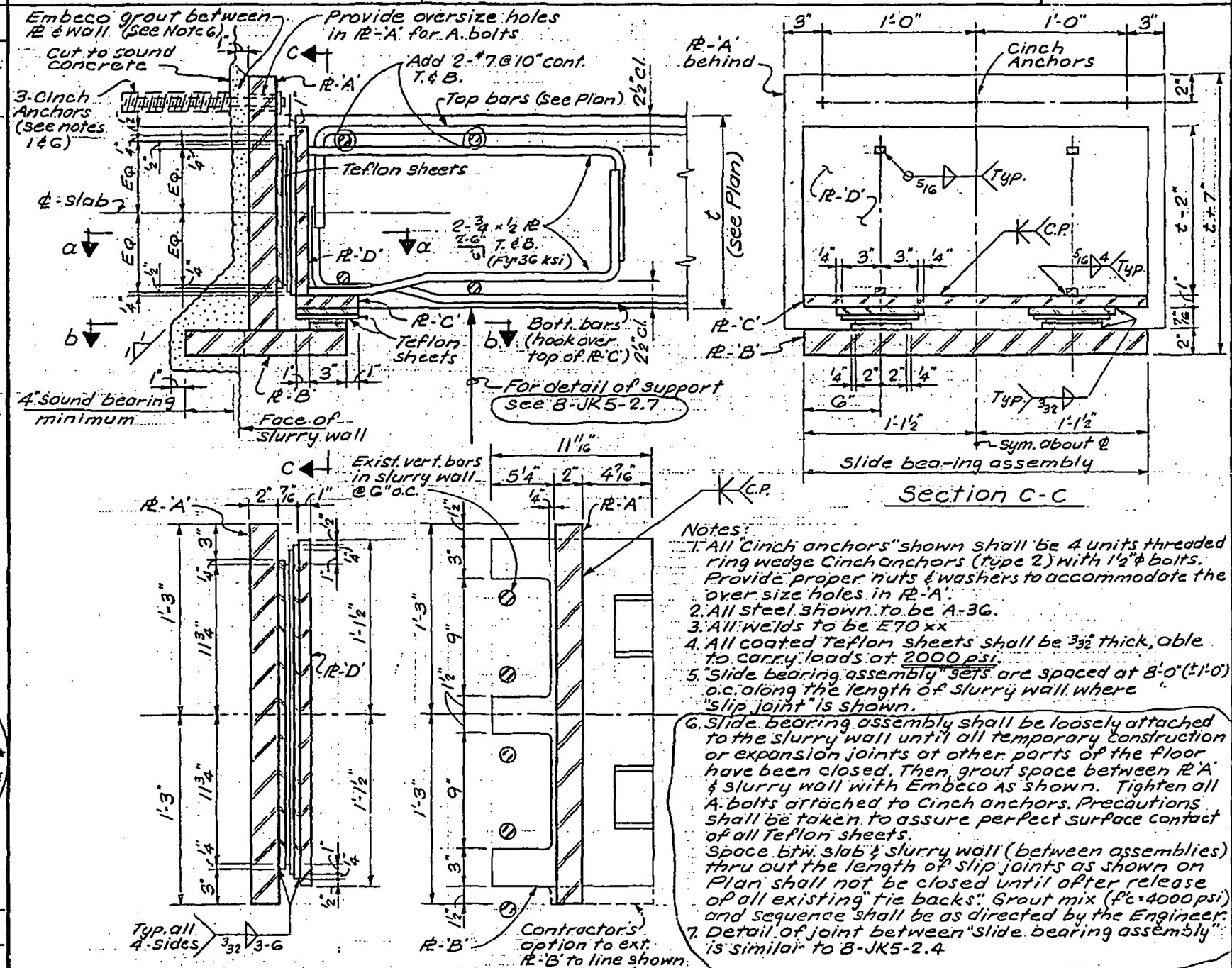

Notes:

1. All "Cinch anchors" shown shall be 4 units threaded ring wedge Cinch anchors (type 2) with 1½" ϕ bolts. Provide proper nuts & washers to accommodate the over size holes in R-'A'.
2. All steel shown to be A-36.
3. All welds to be E70xx
4. All coated Teflon sheets shall be 3/32" thick, able to carry loads at 2000 psi.
5. "Slide bearing assembly" sets are spaced at 8'-0" (±1'-0") o.c. along the length of slurry wall where "slip joint" is shown.
6. Slide bearing assembly shall be loosely attached to the slurry wall until all temporary construction or expansion joints at other parts of the floor have been closed. Then, grout space between R 'A' & slurry wall with Embeco AS shown. Tighten all A. bolts attached to Cinch anchors. Precautions shall be taken to assure perfect surface contact of all Teflon sheets.
   Space btw. slab & slurry wall (between assemblies) thru out the length of slip joints as shown on Plan shall not be closed until after release of all existing "tie backs". Grout mix (f'c = 4000 psi) and sequence shall be as directed by the Engineer.
7. Detail of joint between "slide bearing assembly" is similar to 8-JK5-2.4

LICENSED PROFESSIONAL ENGINEER — LESLIE E. ROBERTSON — No. 34980 — UNIVERSITY OF THE STATE OF NEW YORK

DESIGNED

DRAWN: S.C.

REVIEWED: E.L.

8-JK5-2.5

SKILLING, HELLE, CHRISTIANSEN, ROBERTSON — Structural & Civil Engineers

PROJECT: THE WORLD TRADE CENTER | TITLE: TYP. DET. OF "SLIP-JOINT" BTW. SLAB & SLURRY WALL - TYPE B | DATE: 4-29-69

REVISIONS

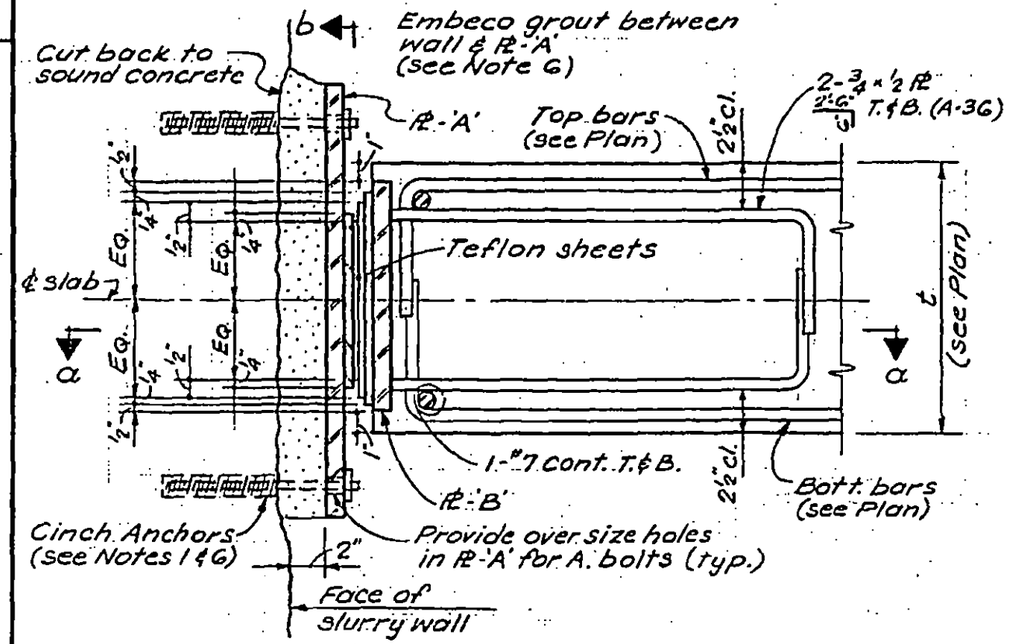

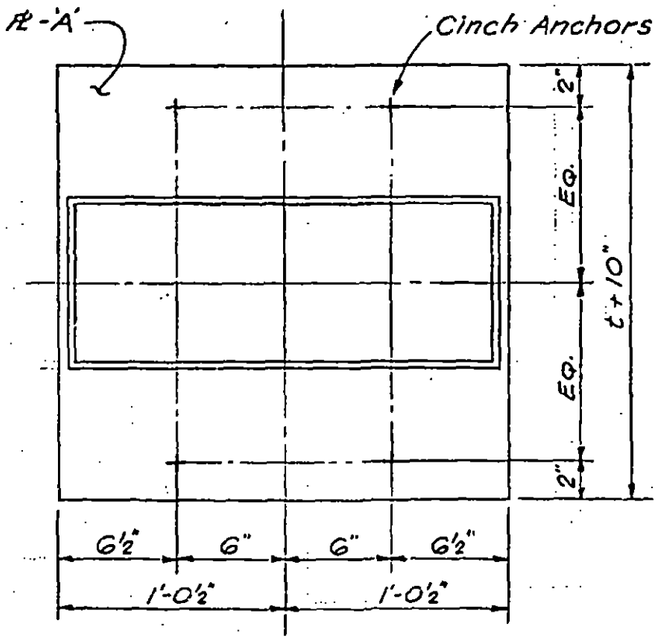

Section b-b

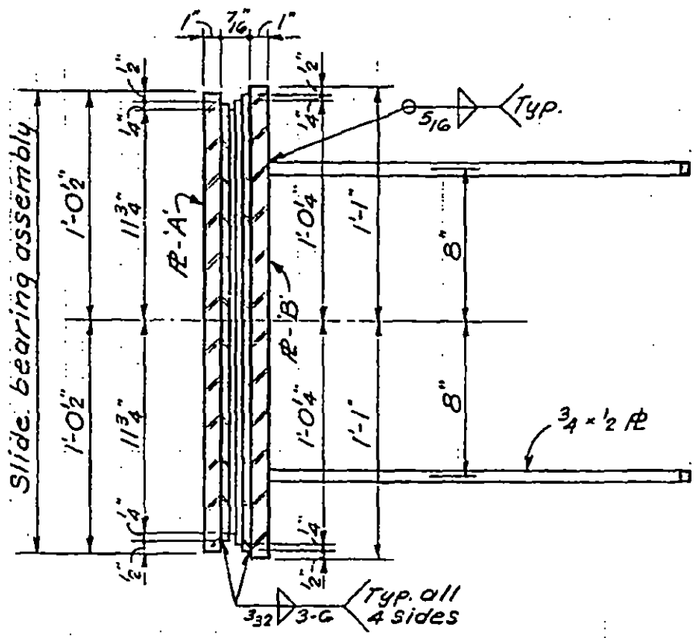

Section a-a

Notes:
1. All "Cinch anchors" shown shall be 3 units threaded ring wedge Cinch anchors (type 2) with ¾"ϕ bolts. Provide proper nuts & washers to accommodate the over size holes in Pl.-'A'.
2. thru 7. See 8-JK5-2.5

LICENSED PROFESSIONAL ENGINEER — LESLIE E. ROBERTSON — No. 34360 — UNIVERSITY OF THE STATE OF NEW YORK

DESIGNED

DRAWN: S.C.

REVIEWED: E.L.

8-JK5-2.6

SKILLING, HELLE, CHRISTIANSEN, ROBERTSON — Structural & Civil Engineers

PROJECT: THE WORLD TRADE CENTER | TITLE: DETAIL OF FLOOR SUPPORT AT PERIMETER WALL | DATE: 5-26-69

REVISIONS

7-22-69

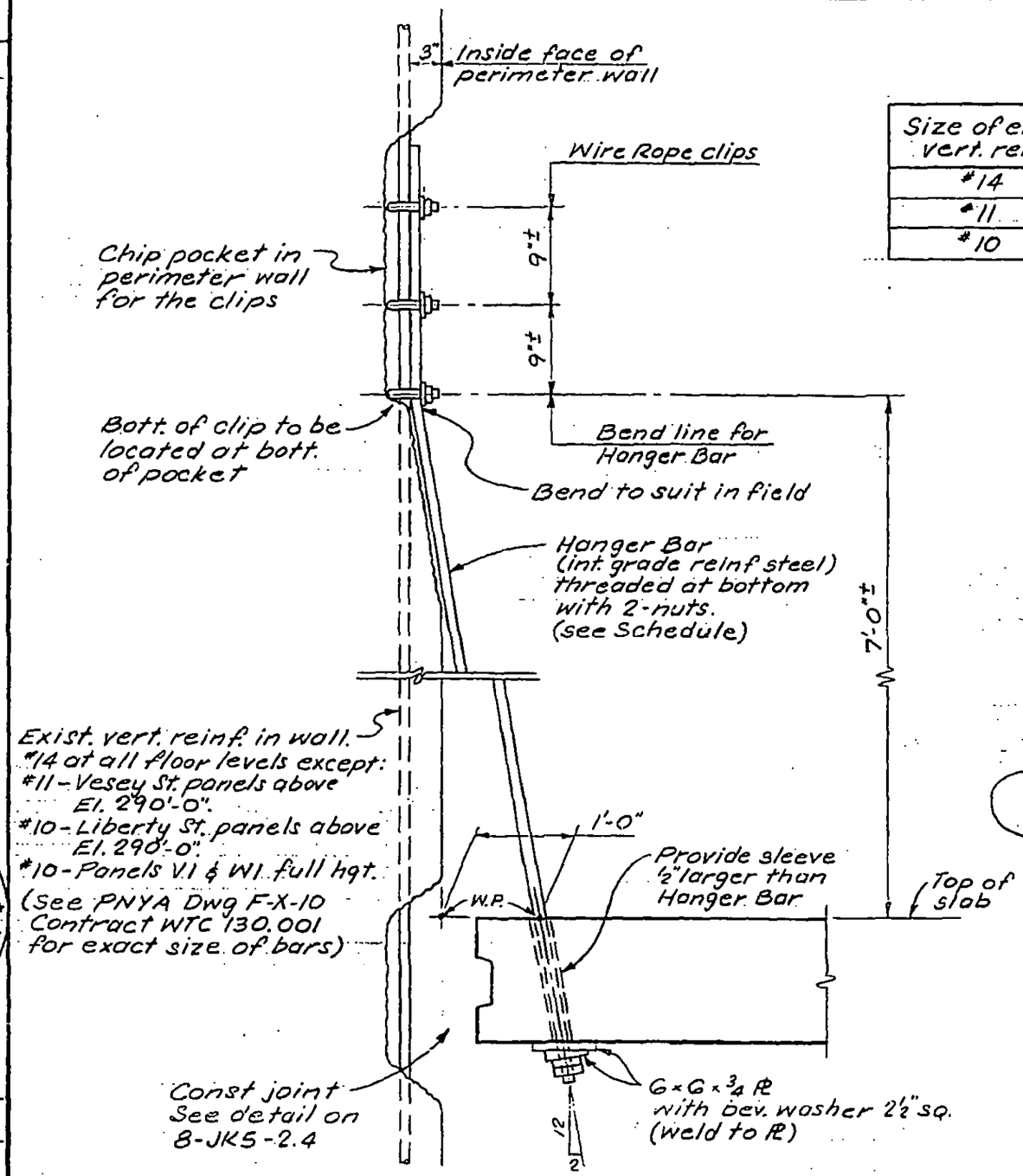

Size of exist vert. reinf.	Hanger Bar size	Hanger Bar thread	Hanger Bar spacing	Wire Rope Clip
#14	#14	1 5/8"	10'-0"	1 3/4"
#11	#11	1 3/8"	7'-0"	1 1/2"
#10	#10	1 1/4"	6'-0"	1 3/8"

Notes:
1. All hanger bars are designed to carry the floor it supports. Any shores supported on this slab is strictly prohibited, unless additional shores are provided at each successive floor below, and supported on solid ground.
2. Contractor's option to use detail shown on 8-JK5-2.8

LICENSED PROFESSIONAL ENGINEER — LESLIE E. ROBERTSON — No. 34360 — UNIVERSITY OF THE STATE OF NEW YORK

DESIGNED

DRAWN: S.C.

REVIEWED: E.L.

8-JK5-2.7

SKILLING, HELLE, CHRISTIANSEN, ROBERTSON — Structural & Civil Engineers

PROJECT: THE WORLD TRADE CENTER | TITLE: ALTERNATE DET. OF FLOOR SUPPORT AT PERIMETER WALL | DATE: 7-22-69

REVISIONS
3-2-70
4-24-70

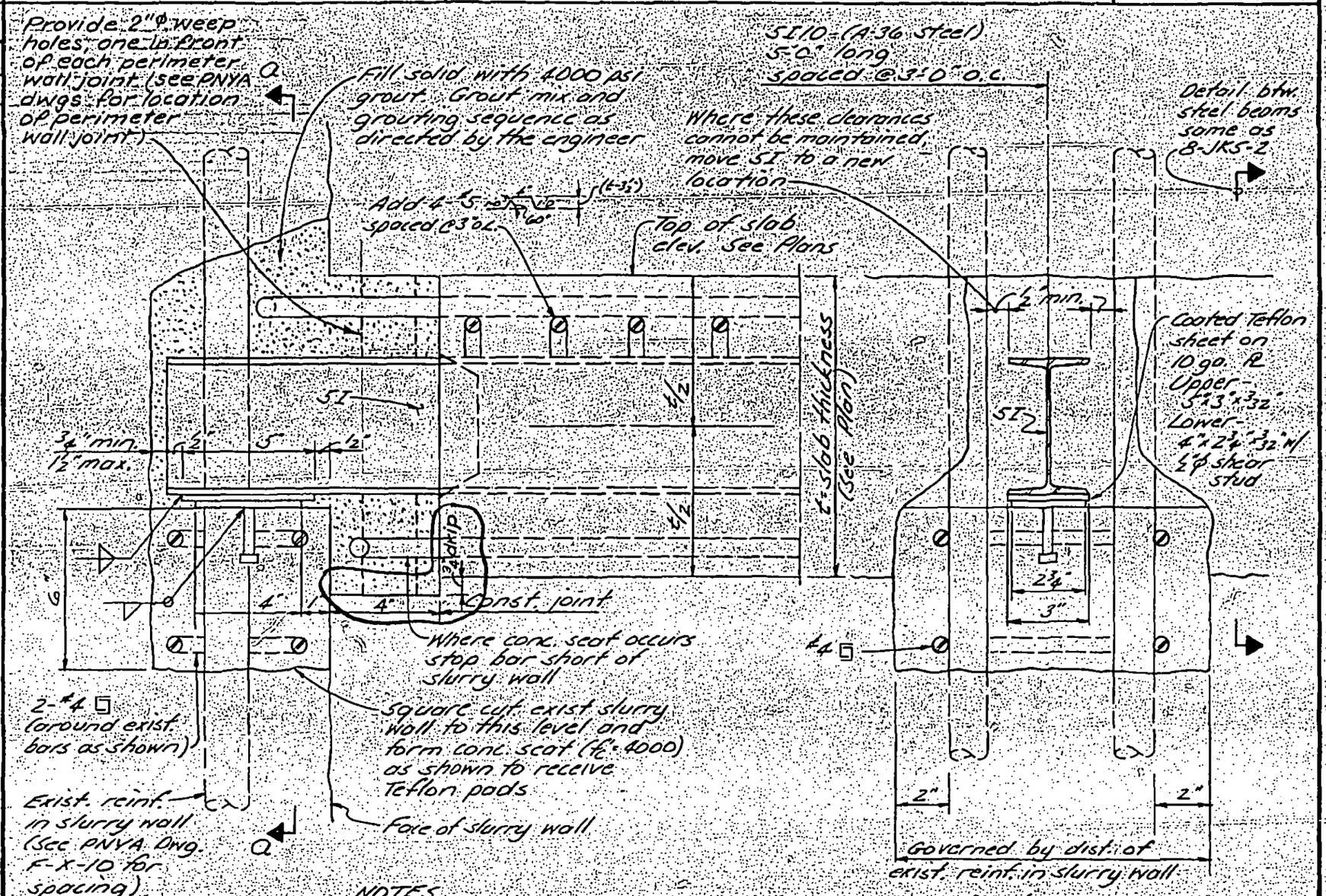

NOTES
1. Detail between steel beams to be same as that shown on 8-JK5-2
2. Detail shown is designed to carry the floor it supports. Any shoring supported on this slab is strictly prohibited, unless additional shores are provided at each successive floor below and supported on solid ground.

LICENSED PROFESSIONAL ENGINEER — LESLIE E. ROBERTSON — No. 34360 — UNIVERSITY OF THE STATE OF NEW YORK

DESIGNED
DRAWN J. Adams
REVIEWED E.L.

8-JK5-2.8

SKILLING, HELLE, CHRISTIANSEN, ROBERTSON — Structural & Civil Engineers

PROJECT: THE WORLD TRADE CENTER | TITLE: SUPPORT DETAIL AT 264 & 274 BTW. TYPE 'A' SLIDE ASSEMBLY | DATE: 6-17-70

REVISIONS

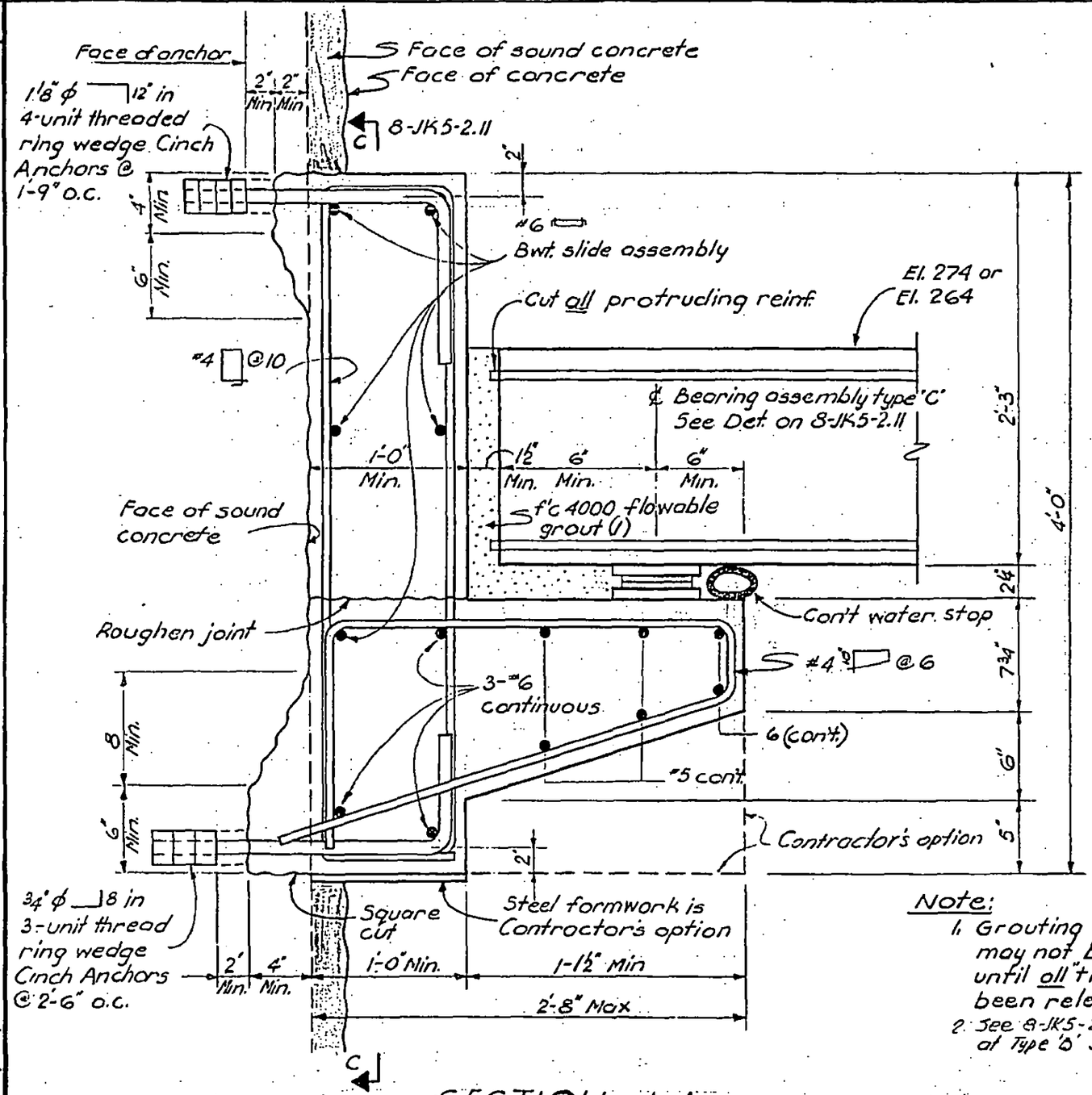

SECTION A-A

Note:

1. Grouting of this joint may not be accomplish until all "tie-backs" have been released.
2. See 8-JK5-2.10 for detail at Type 'B' slide assembly.

DESIGNED ETL
DRAWN D.H
REVIEWED LER

8-JK5-2.9

SKILLING, HELLE, CHRISTIANSEN, ROBERTSON — Structural & Civil Engineers

PROJECT: THE WORLD TRADE CENTER | TITLE: SUPPORT DETAIL AT El. 264 & 274 AT TYPE 'A' SLIDE ASSEMBLY | DATE: 6-17-70

REVISIONS

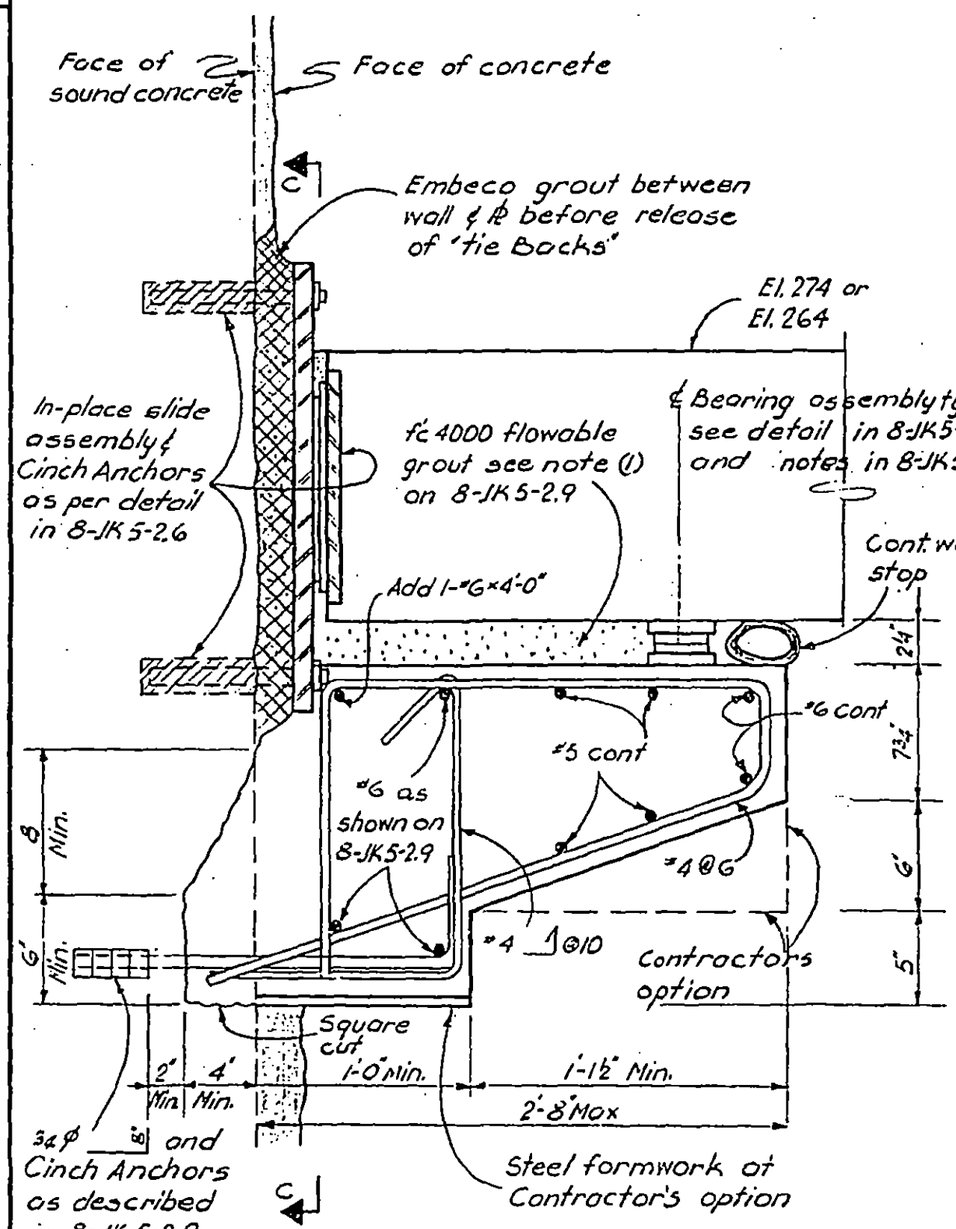

Section B-B

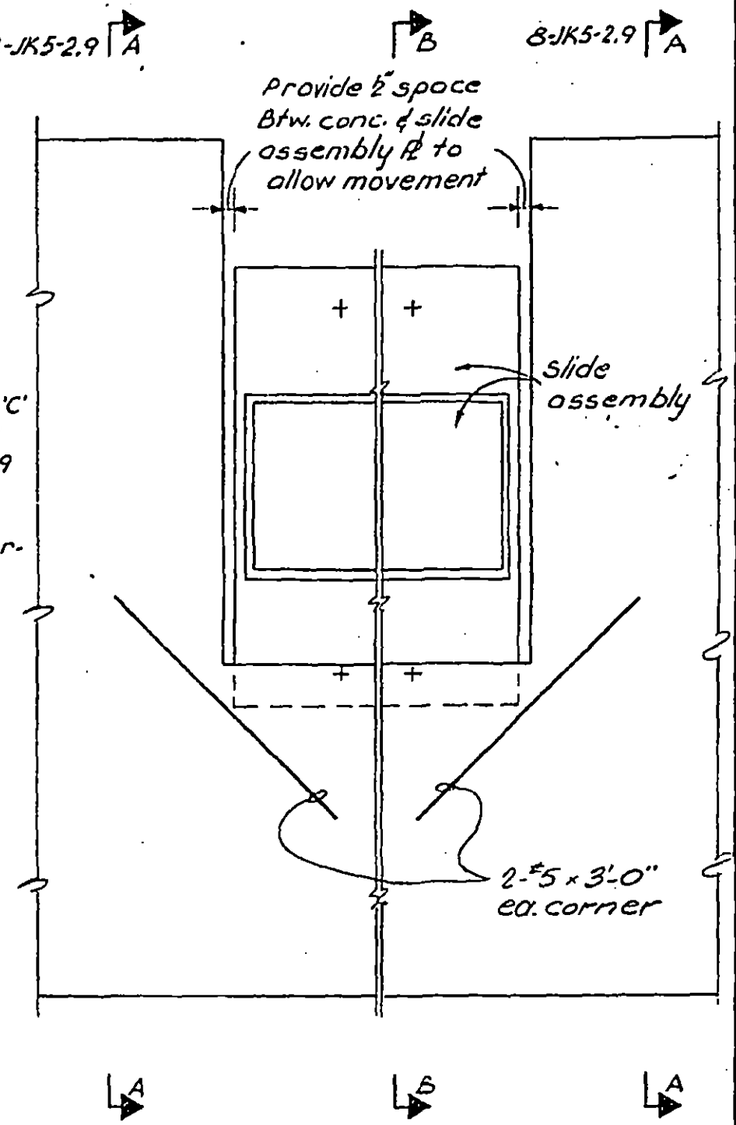

Section C-C

Notes:
1. See 8-JK5-2.9 for detail between slide assembly.

LICENSED PROFESSIONAL ENGINEER — LESLIE E. ROBERTSON — No. 34360 — UNIVERSITY OF THE STATE OF NEW YORK

DESIGNED: E.L
DRAWN: D. Huggins
REVIEWED: LER

8-JK 5-2.10

SKILLING, HELLE, CHRISTIANSEN, ROBERTSON — Structural & Civil Engineers

PROJECT THE WORLD TRADE CENTER | TITLE DETAIL OF TYPE 'C' BEARING ASSEMBLY AT El. 264 & 274 | DATE 6-17-70

REVISIONS

7-11-70
General Rev.
Should be
8-11-70

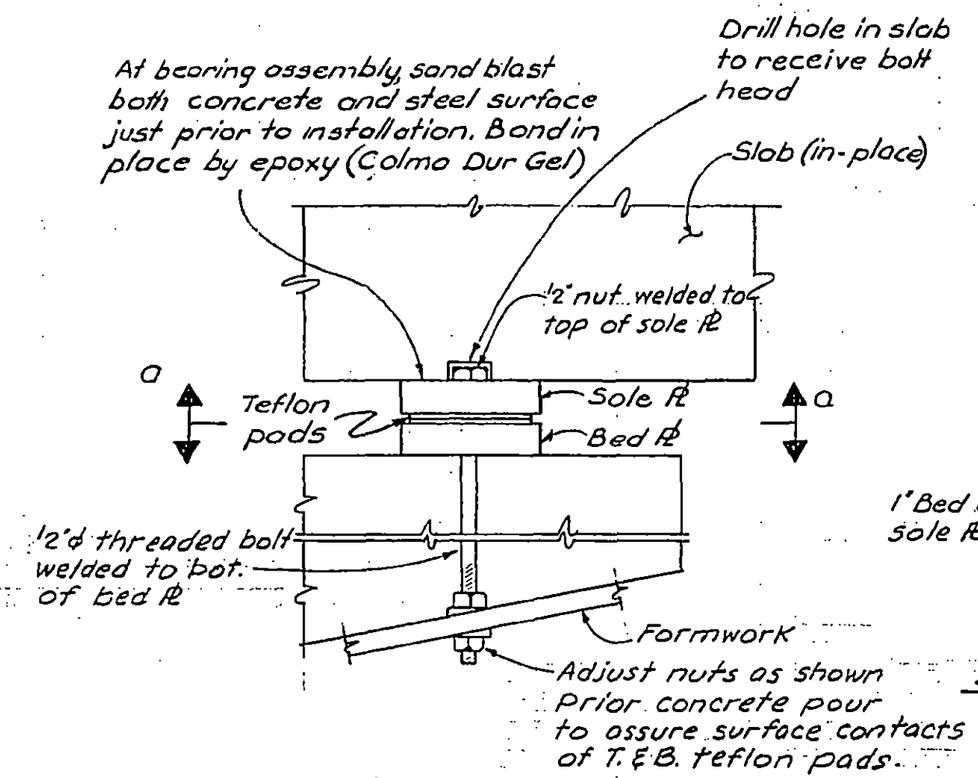

Detail of Bearing Assembly

(Spacing of Assembly : 4'-0" o.c. Max)

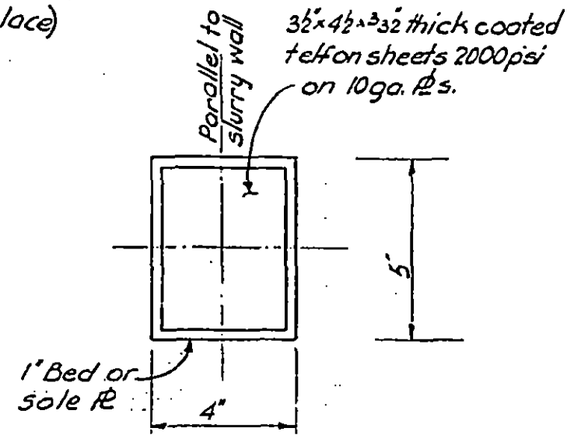

Section a-a

DESIGNED ETL
DRAWN D. Huggins
REVIEWED LER

8-JK & 2.11

SKILLING, HELLE, CHRISTIANSEN, ROBERTSON — Structural & Civil Engineers

PROJECT: THE WORLD TRADE CENTER | TITLE: KEY PLAN- SLIDE ASSEMBLY AT EL.264' & EL.274' | DATE: 7-11-70

(PER PNYA LETTER 7-21-70)

8

REVISIONS

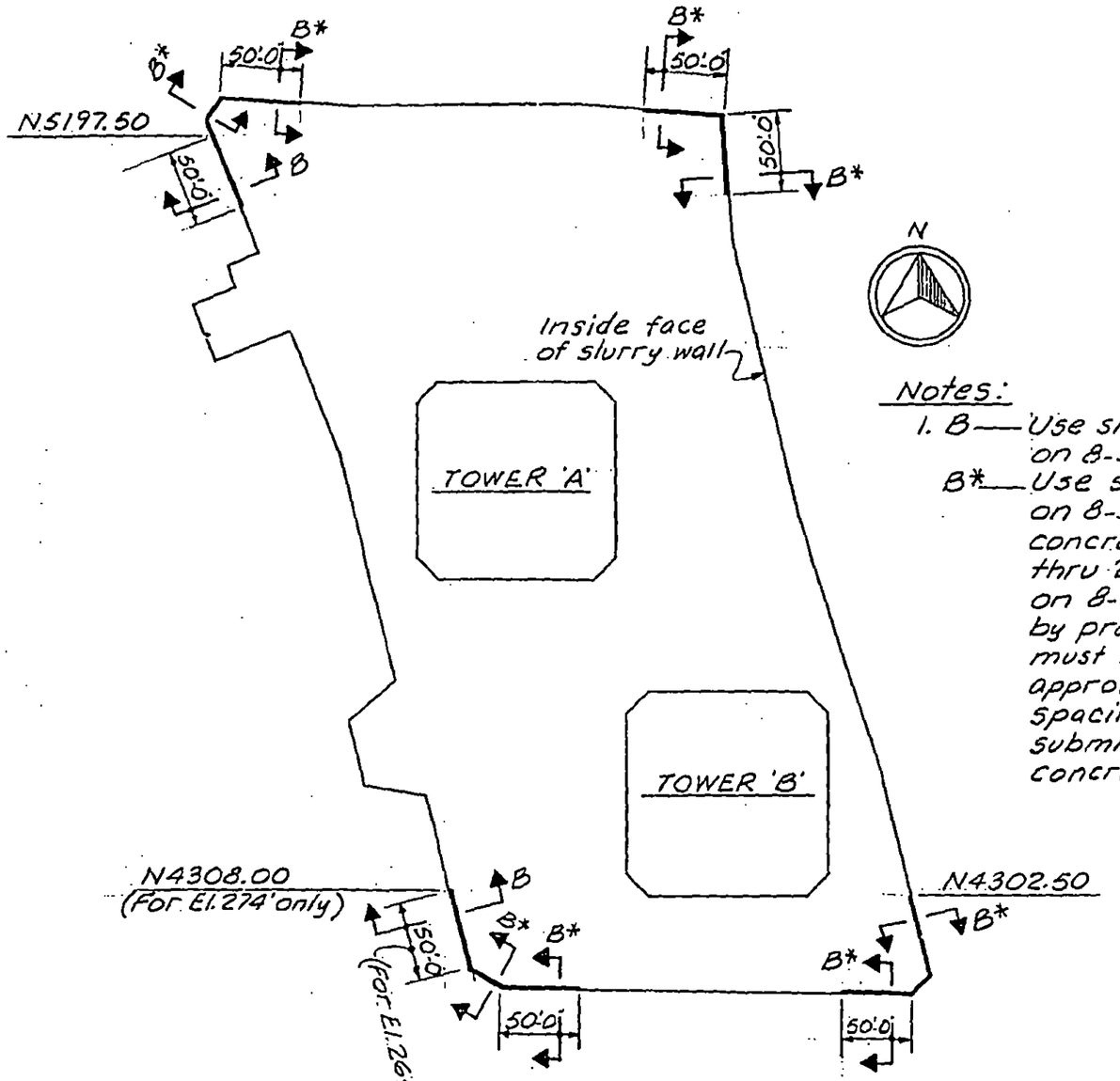

KEY PLAN SHOWING LOCATION AND TYPE OF SLIDE-ASSEMBLY BETWEEN SLAB AND SLURRY WALL AT EL.264' & EL.274'.

Notes:

1. B — Use slide assembly per detail shown on 8-JK5-2.6.
   B* — Use slide assembly per detail shown on 8-JK5-2.6 in conjuntion with concrete haunches shown on 8-JK5-2.9 thru 2.11. Steel beam supt's as shown on 8-JK5-2.8 may be substituted by proper shorings and these shorings must be carried down to solid ground approved by the Engineers. Size and spacing of these shorings must be submited for approval prior any concreting work.

LICENSED PROFESSIONAL ENGINEER — LESLIE E. ROBERTSON — No. 34360 — UNIVERSITY OF THE STATE OF NEW YORK

DESIGNED

DRAWN: A.FRANQUI

REVIEWED: E.LIU

WORTHINGTON, SKILLING, HELLE & JACKSON Civil & Structural Engineers

PROJECT THE WORLD TRADE CENTER | TITLE TYPICAL FLAT SLAB DETAILS - WITH DROP PANELS | DATE 5-1-68

REVISIONS
12-18-68
1-22-69
2-14-69

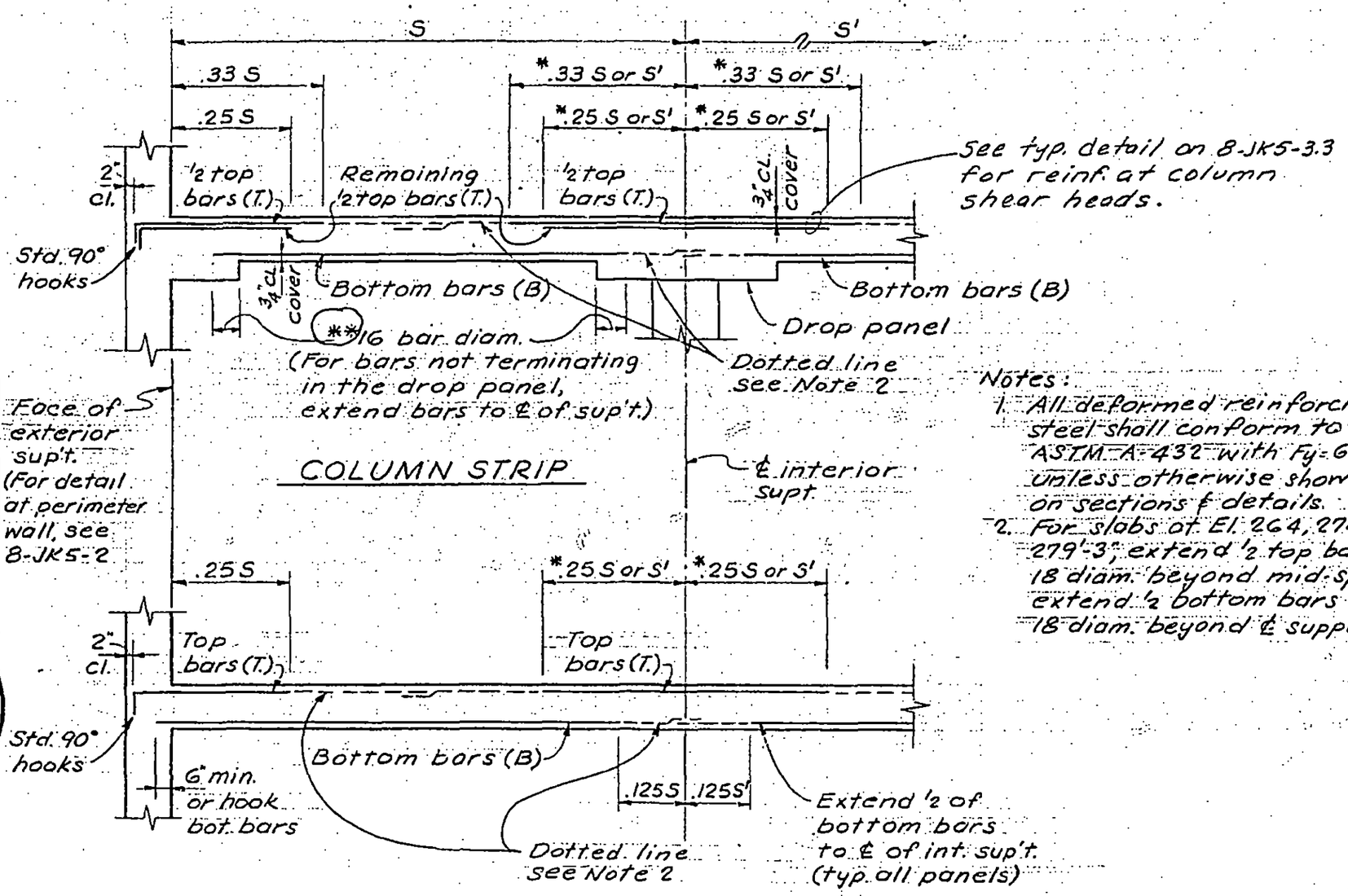

Notes:
1. All deformed reinforcing steel shall conform to ASTM A-432 with Fy = 60ksi unless otherwise shown on sections & details.
2. For slabs at El. 264, 274 & 279'-3", extend ½ top bars 18 diam. beyond mid-span, extend ½ bottom bars 18 diam. beyond ℄ support.

LICENSED PROFESSIONAL ENGINEER LESLIE E. ROBERTSON No. 34360 UNIVERSITY OF THE STATE OF NEW YORK

DRAWN S.C.
REVIEWED J.M. & E.L.

* S or S' whichever is larger
** For bars not terminating in drop panel, extend bars as shown for panels without drops (see 8-JK5-3.2).

8-JK5-3.1

WORTHINGTON, SKILLING, HELLE & JACKSON Civil & Structural Engineers

PROJECT THE WORLD TRADE CENTER | TITLE TYPICAL FLAT SLAB DETAILS-WITHOUT DROP PANELS | DATE 5-1-68

REVISIONS
12-18-68
1-22-69

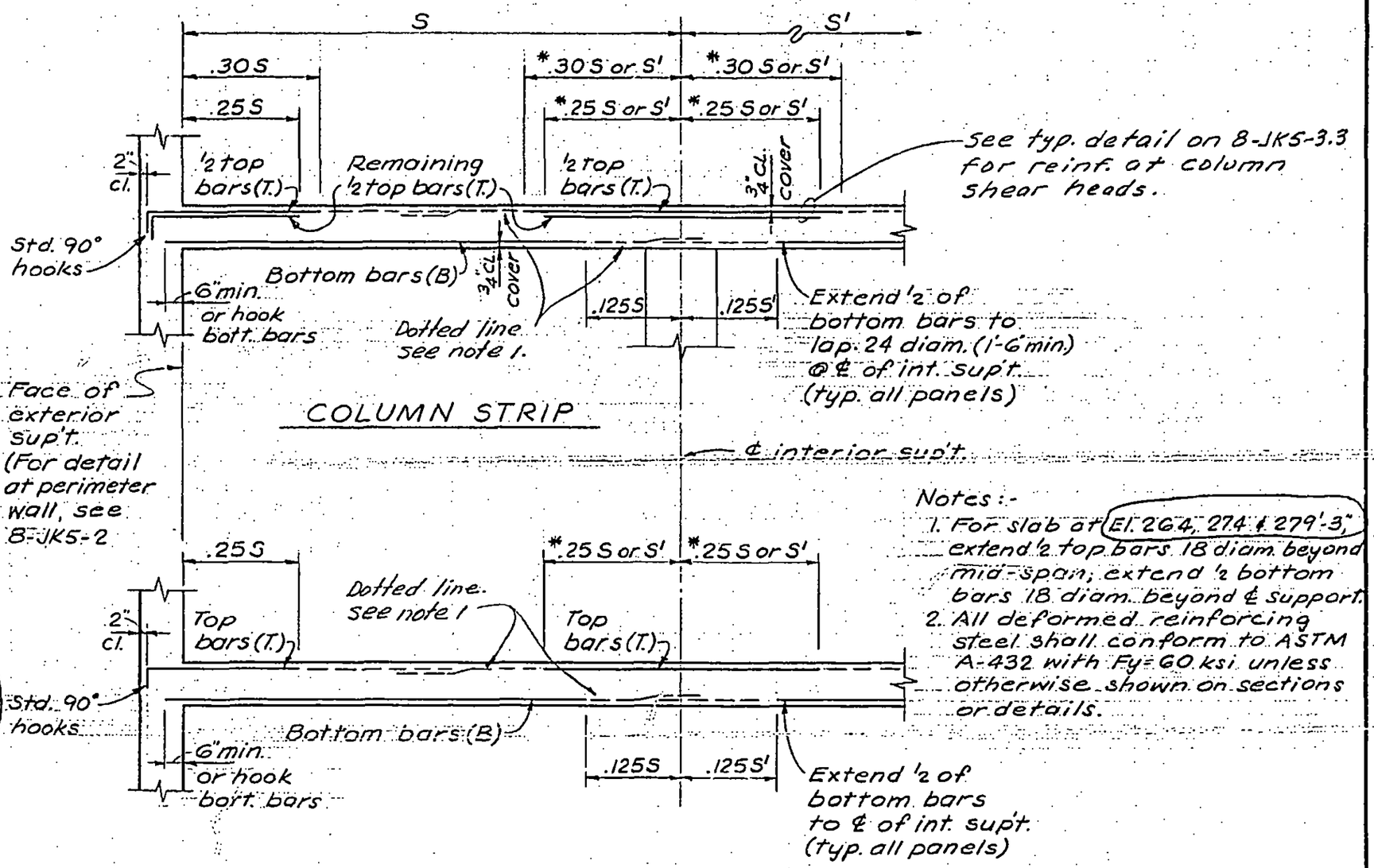

Notes :-

1. For slab at El. 264, 274 & 279'-3", extend ½ top bars 18 diam. beyond mid-span; extend ½ bottom bars 18 diam. beyond ℄ support.
2. All deformed reinforcing steel shall conform to ASTM A-432 with Fy=60 ksi unless otherwise shown on sections or details.

* S or S' whichever is larger

LICENSED PROFESSIONAL ENGINEER LESLIE E. ROBERTSON No. 34360 UNIVERSITY OF THE STATE OF NEW YORK

DRAWN S.C.
REVIEWED J.M. & E.L.

8-JK5-3.2

SKILLING, HELLE, CHRISTIANSEN, ROBERTSON — Structural & Civil Engineers

PROJECT THE WORLD TRADE CENTER | TITLE TYPICAL DETAIL OF REINF. OVER COL. SHEAR HEADS | DATE 12-18-68

REVISIONS

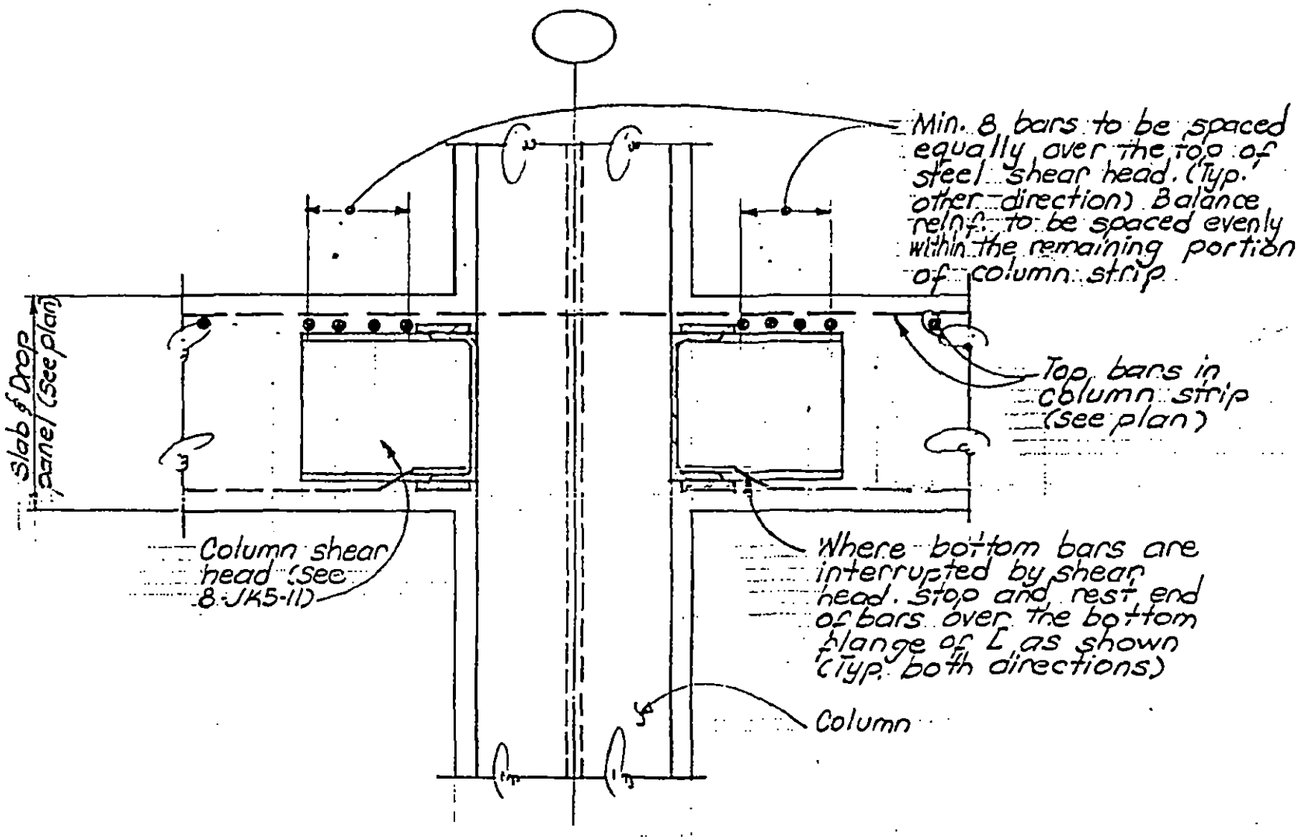

LICENSED PROFESSIONAL ENGINEER
LESLIE E. ROBERTSON
No. 34360
UNIVERSITY OF THE STATE OF NEW YORK

DESIGNED

DRAWN S.T.M.

REVIEWED J.M. & E.L.

8-JK5-3.3

WORTHINGTON, SKILLING, HELLE & JACKSON — Civil & Structural Engineers

PROJECT: THE WORLD TRADE CENTER | TITLE: TYP. DETAIL — ONE-WAY SLAB OVER CONC. STRUCT. | DATE: 5-1-68

REVISIONS
12-18-68
3-7-69

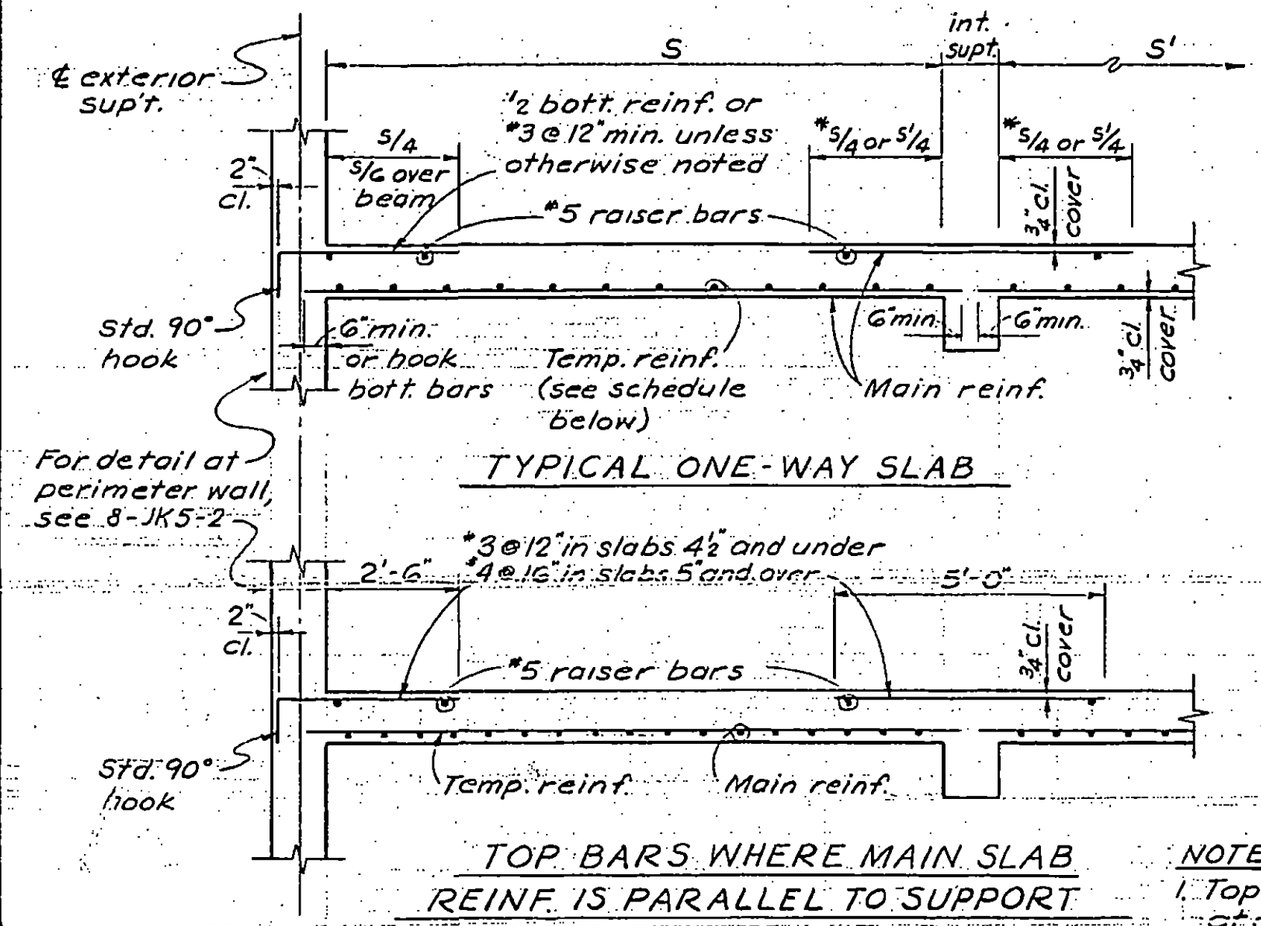

TYPICAL ONE-WAY SLAB

TOP BARS WHERE MAIN SLAB REINF. IS PARALLEL TO SUPPORT

* S or S' whichever is larger.

TEMPERATURE REINF. SCHEDULE	
4½" slab	#3 @ 12"
5" to 6"	#4 @ 16"
6½" to 7"	#4 @ 14"
7½" to 8"	#4 @ 12"
8½" to 10"	#5 @ 14"
10½" to 12"	#5 @ 12"
12½" to 14"	#5 @ 11"
14½" to 15"	#5 @ 10"

NOTES:

1. Top bars shall be provided at all slab supports as shown unless heavier reinf. is indicated on Plans or Sections. Lap temp. reinf. 1'-6" min., one raiser bar may replace one temp. bar.
2. All deformed reinforcing steel shall conform to ASTM A-432 with Fy. 60 ksi unless otherwise shown on sections or details.

LICENSED PROFESSIONAL ENGINEER — LESLIE E. ROBERTSON — No. 34360 — UNIVERSITY OF THE STATE OF NEW YORK

DRAWN: S.C.
CHECKED: J.M. & E.L.

8-JK5-4.1

WORTHINGTON, SKILLING, HELLE & JACKSON — Civil & Structural Engineers

PROJECT THE WORLD TRADE CENTER | TITLE TYP. DETAIL -- ONE-WAY SLAB OVER STEEL STRUCT. | DATE 5-1-68

REVISIONS

12-18-68

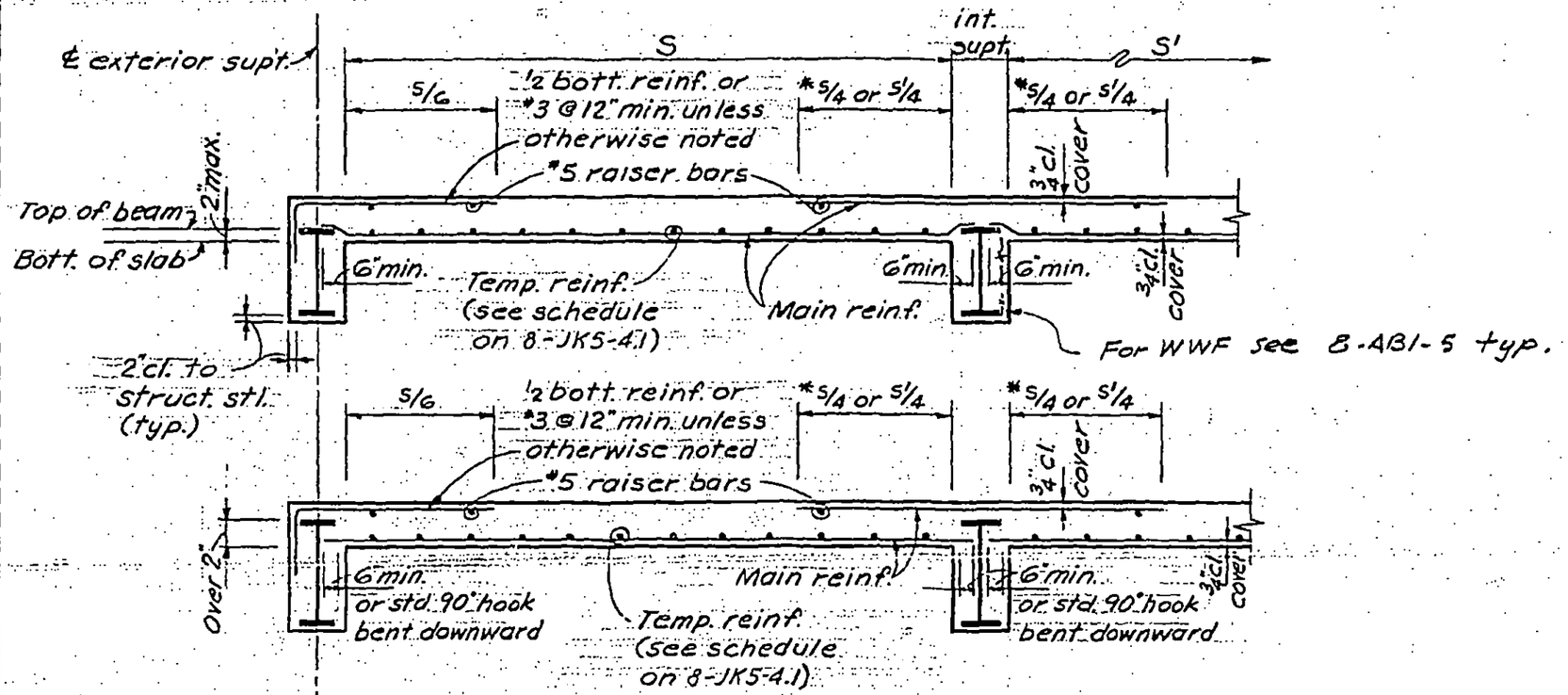

TYPICAL ONE-WAY SLAB
(with concrete fire-proofing to steel beams)

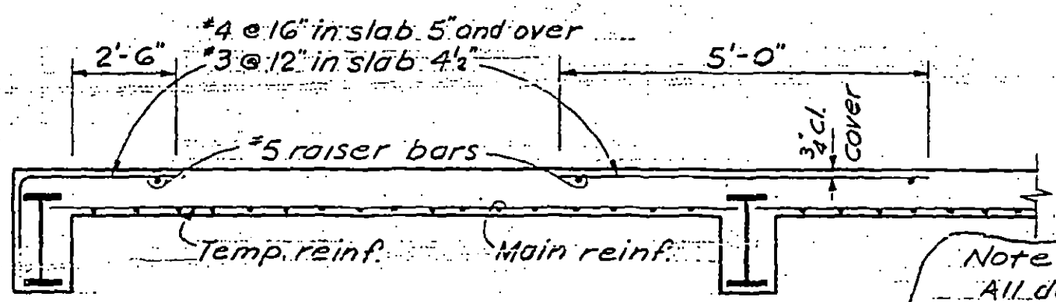

TOP BARS WHERE MAIN SLAB REINF. IS PARALLEL TO SUPPORT

Note:
All deformed reinforcing steel shall conform to ASTM A-432 with fy = 60ksi unless otherwise shown on sections or details.

* S or S' whichever is larger.

LICENSED PROFESSIONAL ENGINEER
LESLIE E. ROBERTSON
No. 34360
UNIVERSITY OF THE STATE OF NEW YORK

DRAWN S.C.
REVIEWED J.M.H. & L.E.R.

UNIVERSITY OF THE STATE OF NEW YORK
LICENSED PROFESSIONAL ENGINEER
LESLIE E. ROBERTSON
No. 34360

REVISIONS

WORTHINGTON, SKILLING, HELLE & JACKSON
Civil & Structural Engineers

PROJECT THE WORLD TRADE CENTER

TITLE TYP. DETAIL - ONE-WAY SLAB OVER STEEL STRUCT.

DATE 5-1-68

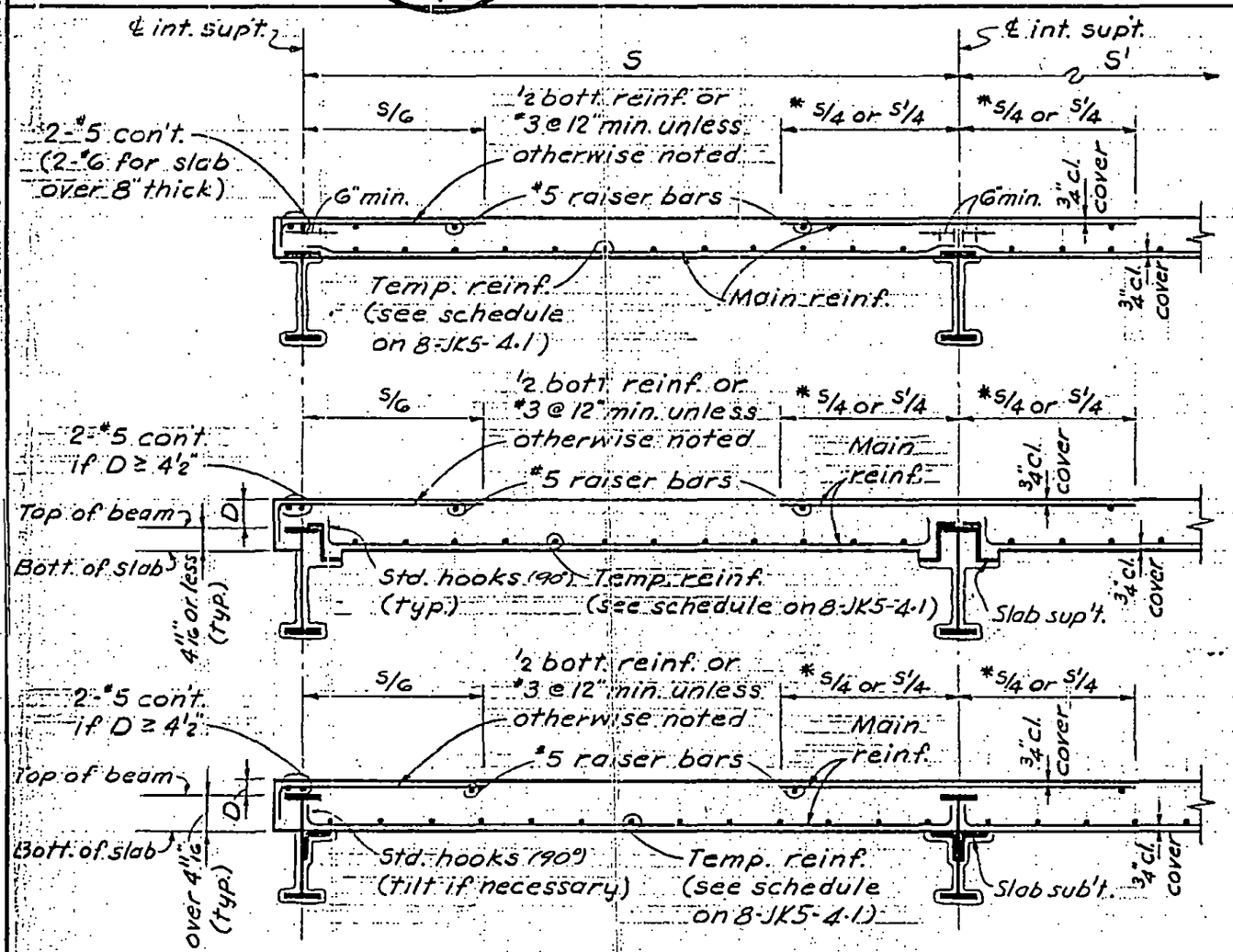

TYPICAL ONE-WAY SLAB

(with "spray-on" fire-proofing to steel beams)

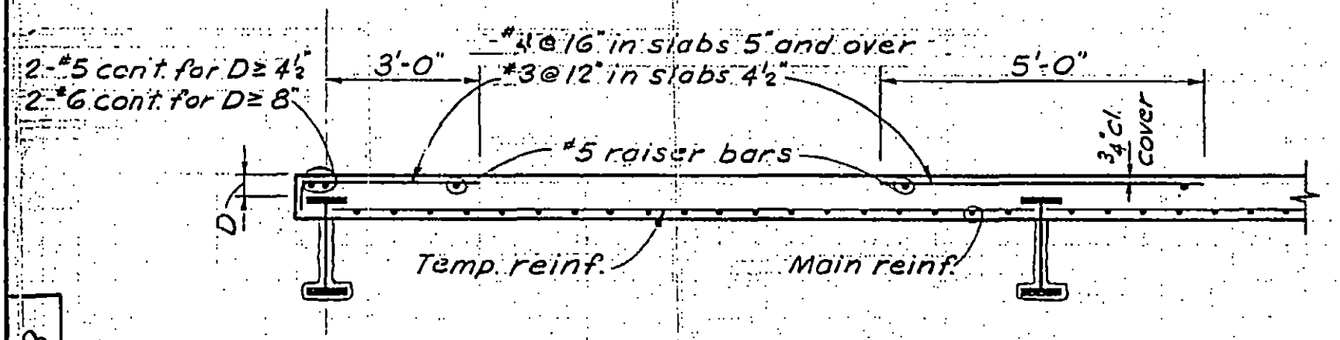

TOP BARS WHERE MAIN SLAB REINF. IS PARALLEL TO SUPPORT

* S or S' whichever is larger.

8-JK5-4.3

UNIVERSITY OF THE STATE OF NEW YORK ★ LICENSED PROFESSIONAL ENGINEER ★
LESLIE E. ROBERTSON
No. 36430

REVISIONS

WORTHINGTON, SKILLING, HELLE & JACKSON
Civil & Structural Engineers

PROJECT THE WORLD TRADE CENTER

TITLE TYP. DET. OF ONE-WAY SLAB ON STEEL STRUCT. WITH W.W.F.

DATE 5-1-68

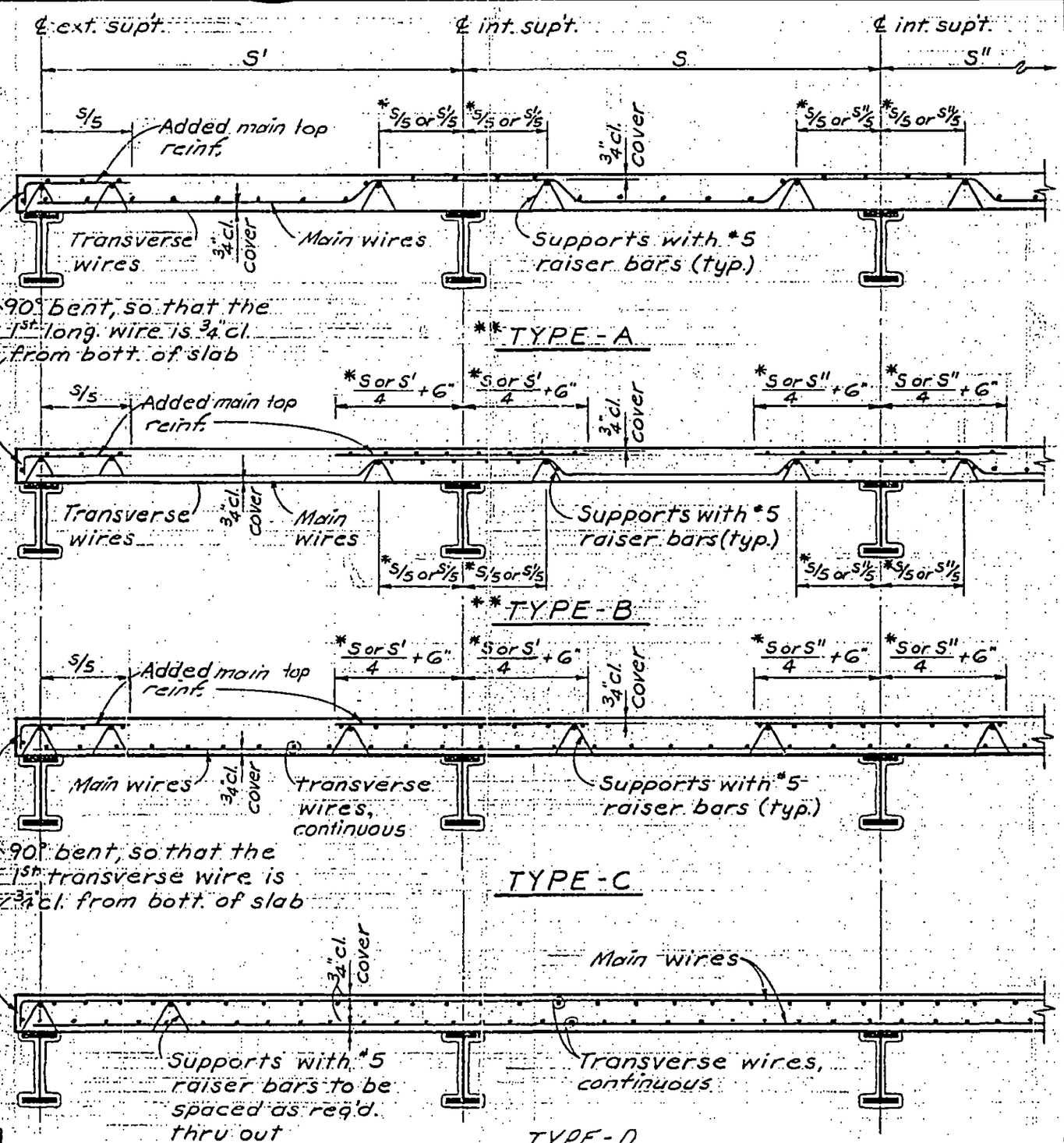

* Whichever is larger.

** Types A & B are limited to span less than 10'-0" and size of wire not exceeding ½" in diameter.

Notes: (cont.)

4. Main wires are parallel to the span of the slab, regardless of position on mesh roll or mat.

NOTES:

1. See 8-JK5-7 for one-way slab schedule with W.W.F.
2. See 8-JK5-5.2 for top wires at locations where main reinf. parallel to support.
3. Splice main wires where shown, and splice cont. transverse wires by overlapping edges of W.W.F. Overlap dist. btwn. outermost crosswires = crosswire spacing + 2."

8-JK5-5.1

LICENSED PROFESSIONAL ENGINEER
LESLIE E. ROBERTSON
No. 34360
THE STATE OF NEW YORK
UNIVERSITY OF

REVISIONS
8-23-68

SKILLING - HELLE - CHRISTIANSEN - ROBERTSON
Structural & Civil Engineers

PROJECT THE WORLD TRADE CENTER

TITLE TYPICAL DETAILS - ONE-WAY SLAB ON STEEL WITH W.W.F.

DATE 5-1-68

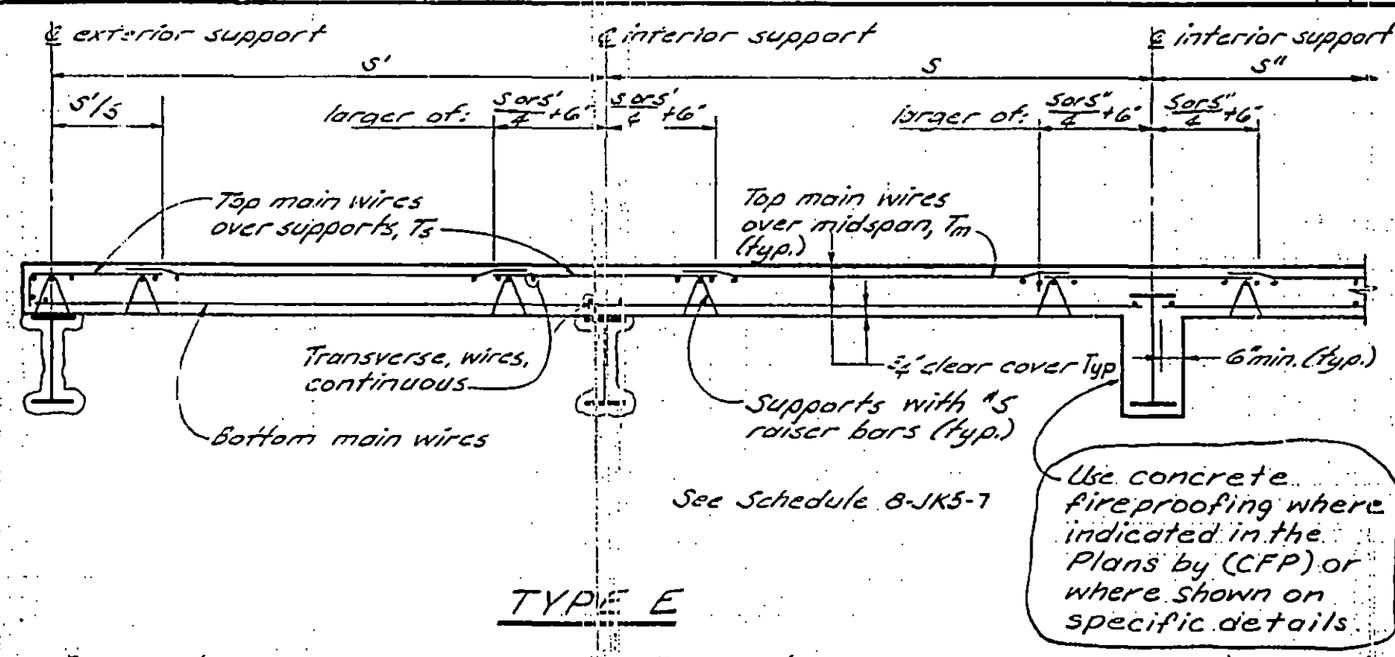

See Schedule 8-JK5-7

TYPE E

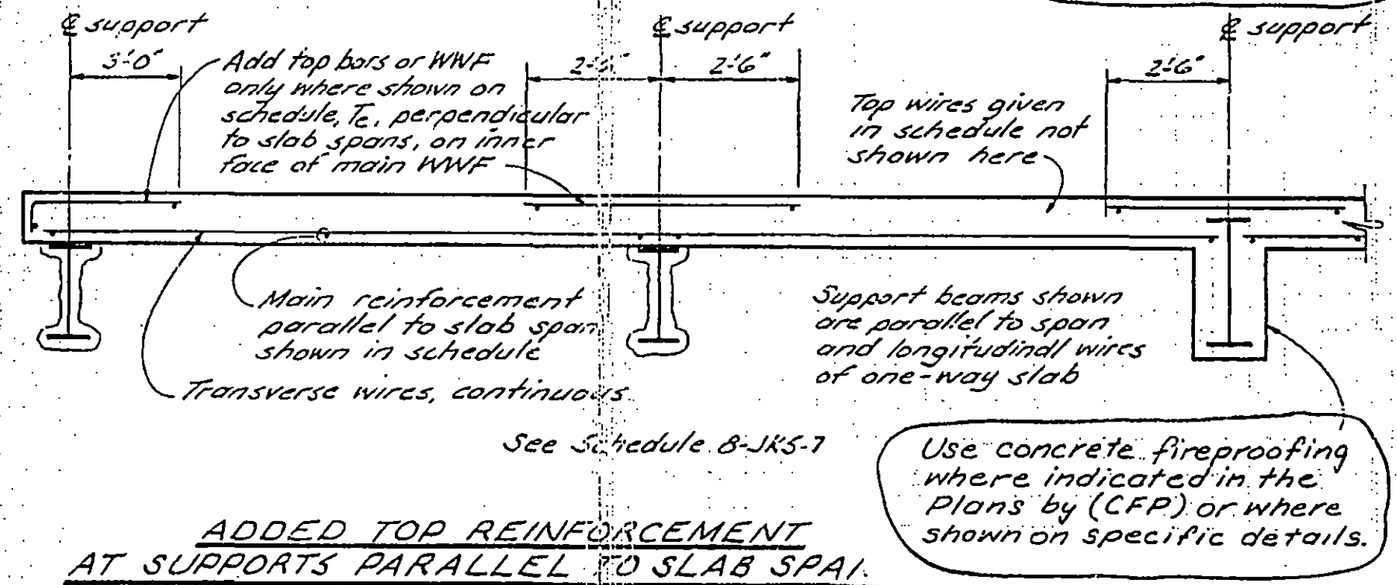

See Schedule 8-JK5-7

ADDED TOP REINFORCEMENT AT SUPPORTS PARALLEL TO SLAB SPAN FOR SLAB TYPES A, B, C, D, E

NOTES:

1. In all cases, main reinforcement is parallel to the span of the slab, regardless of position on the mesh roll or mat.
2. Splice main wires where shown, and splice continuous transverse wires by overlapping edges of WWM. Overlap distance between outermost cross wires = crosswire spacing + 2".

8-JK5-5.2

SKILLING - HELLE - CHRISTIANSEN - ROBERTSON. Structural & Civil Engineers

PROJECT THE WORLD TRADE CENTER | TITLE TYP. CONSTRUCTION JOINTS FOR FLAT SLABS | DATE 5-1-68

REVISIONS
12-18-68
6-6-69

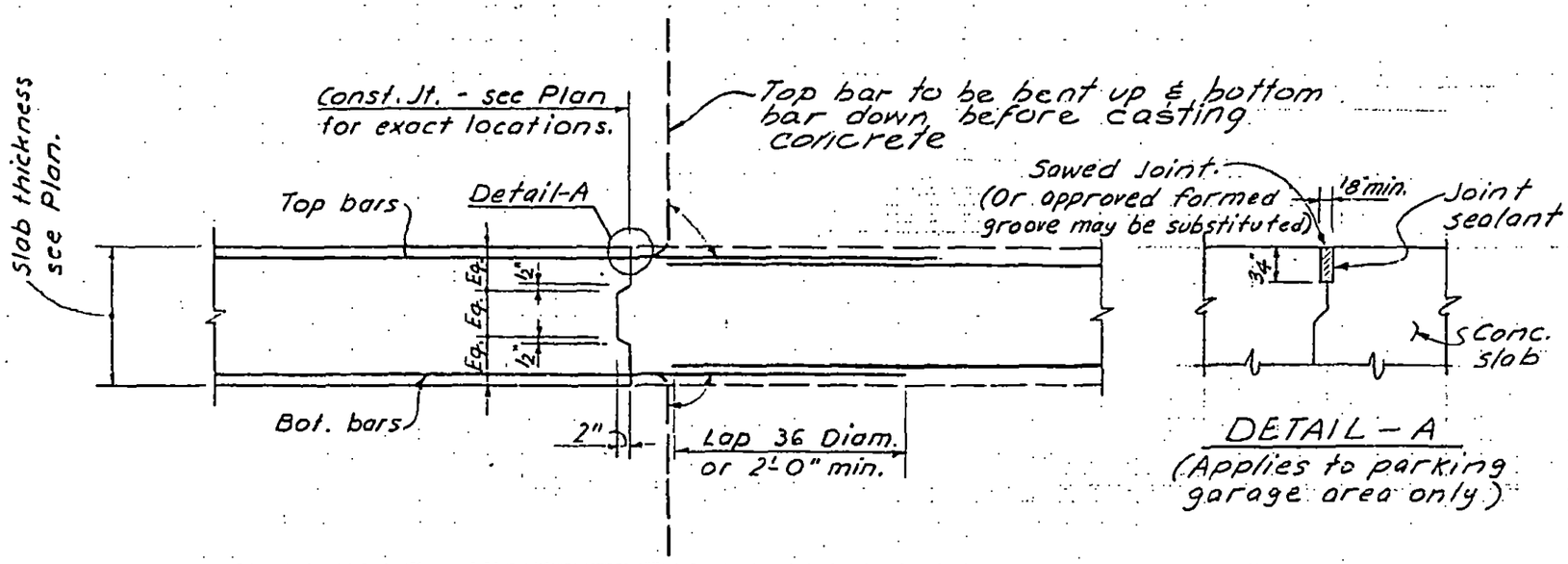

DETAIL – A
(Applies to parking garage area only)

Construction Joint Adjacent to Existing Path Tube

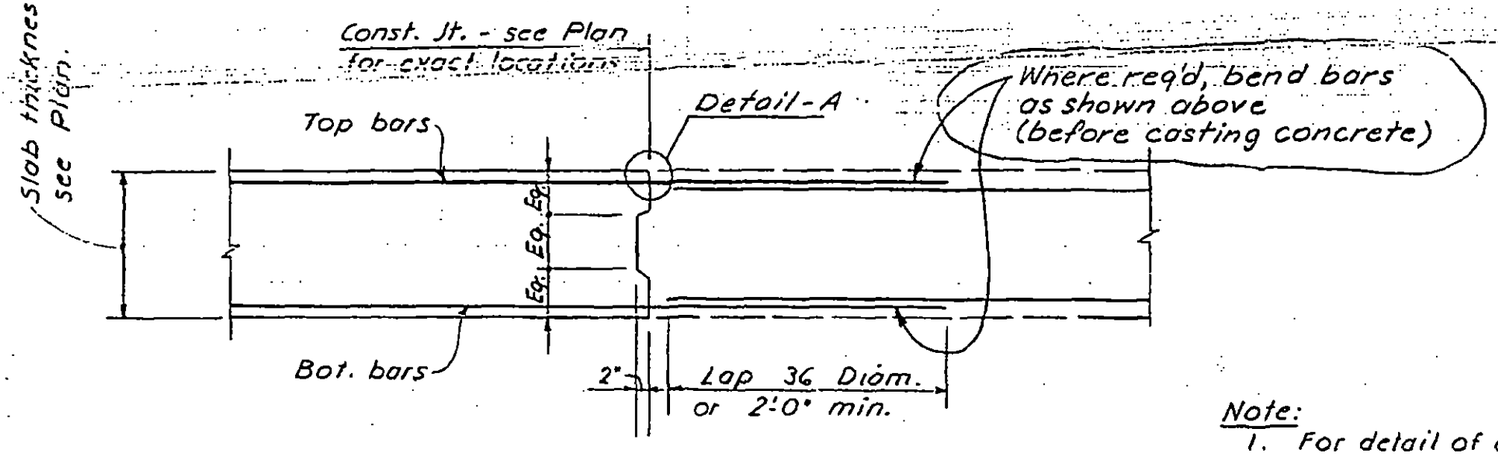

Note:
1. For detail of const. joints at El. 264, see 8-AB4-9.1

Typical Construction Joint Detail

LICENSED PROFESSIONAL ENGINEER
LESLIE E. ROBERTSON
No. 34360
UNIVERSITY OF THE STATE OF NEW YORK

DRAWN S.C.
REVIEWED J.M. & E.L.

8-JK5-6

SKILLING - HELLE - CHRISTIANSEN - ROBERTSON Structural & Civil Engineers

PROJECT THE WORLD TRADE CENTER | TITLE ONE WAY SLAB WITH WWF SCHEDULE | DATE 5-1-68

REVISIONS

7-23-69

SLAB MARK	SLAB t inch	SLAB TYPE note1	BOTTOM REINF'M'T MAIN REINF. Size	MAIN REINF. Spac'g	TRANSV. REINF. Size	TRANSV. REINF. Spac'g in.	TOP REINFORCEMENT OVER SUPPORTS MAIN WIRES, Ts Size	MAIN WIRES, Ts Spac'g	TRANSV. WIRES Size	TRANSV. WIRES Spac'g	BETWEEN SUPPORTS MAIN WIRES, Tm Size	MAIN WIRES, Tm Spac'g	TRANSV. WIRES Size	TRANSV. WIRES Spac'g	ADDED TRANSV. AT PHIL. ENDS. Te Size	ADDED TRANSV. AT PHIL. ENDS. Te Spac'g	REMARKS
A	7	E	D-0.345"	4"	D-0.282"	6"	D-0.397"	4"	D-0.324"	6"	D-0.280"	9"	D-0.225"	12"	–	–	
B	7	E	D-0.422"	4"	D-0.345"	6"	D-0.422"	4"	D-0.345"	6"	D-0.280"	9"	D-0.225"	12"	–	–	
C	7	E	D-0.380"	4"	D-0.310"	6"	D-0.397"	4"	D-0.324"	6"	D-0.280"	9"	D-0.225"	12"	–	–	
D	7	E	D-0.345"	4"	D-0.282"	6"	D-0.361"	4"	D-0.294"	6"	D-0.280"	9"	D-0.225"	12"	–	–	
E	10	E	D-0.326"	4"	D-0.271"	6"	D-0.306"	4"	D-0.250"	6"	D-0.250"	9"	D-0.200"	12"	–	–	
F	11	E	D-0.306"	4"	D-0.250"	6"	D-0.361"	4"	D-0.294"	6"	D-0.250"	9"	D-0.200"	12"	–	–	
G	11	E	D-0.306"	4"	D-0.250"	6"	D-0.332"	4"	D-0.271"	6"	D-0.250"	9"	D-0.200"	12"	–	–	
H	11	E	D-0.306"	4"	D-0.250"	6"	D-0.306"	4"	D-0.250"	6"	D-0.250"	9"	D-0.200"	12"	–	–	
J	12	E	D-0.332"	4"	D-0.271"	6"	D-0.332"	4"	D-0.271"	6"	D-0.250"	9"	D-0.200"	12"	–	–	
K	19	E	D-0.422"	4"	D-0.345"	6"	D-0.422"	4"	D-0.345"	6"	D-0.280"	9"	D-0.225"	12"	–	–	
AA	7	D	D-0.269"	4"	D-0.219"	6"	D-0.306"	4"	D-0.250"	6"	–	–	–	–	–	–	
BB	7	D	D-0.306"	4"	D-0.250"	6"	D-0.326"	4"	D-0.271"	6"	–	–	–	–	–	–	
CC	7	D	D-0.252"	4"	D-0.206"	6"	D-0.252"	4"	D-0.206"	6"	–	–	–	–	–	–	
DD	11	D	D-0.306"	4"	D-0.250"	6"	D-0.306"	4"	D-0.250"	6"	–	–	–	–	–	–	
EE	7	E	D-0.486"	3"	D-0.486"	6"	D-0.486"	4"	D-0.450"	6"	D-0.325"	9"	D-0.225"	12"	–	–	
FF	7	E	D-0.452"	4"	D-0.358"	6"	D-0.461"	4"	D-0.358"	6"	D-0.325"	9"	D-0.225"	12"	–	–	
GG	10	E	D-0.314"	4"	D-0.271"	6"	D-0.314"	4"	D-0.271"	6"	D-0.325"	9"	D-0.225"	12"	–	–	
HH	9	D	D-0.345"	4"	D-0.282"	6"	D-0.361"	4"	D-0.294"	6"	—	—	—	—	—	—	

LICENSED PROFESSIONAL ENGINEER
LESLIE E. ROBERTSON
No. 34360
UNIVERSITY OF THE STATE OF NEW YORK

Notes:

1. For slab type, see JKS-5.1 & -5.2.
2. Main reinforcement is parallel to span of slab, as shown on dwg. in short direction of slab.
3. Main reinforcement may be longitudinal wires or short wires in any WWF roll or mat.
4. All wires shall be deformed and shall conform to ASTM A496-64
5. All WWF shall conform to ASTM A497-64

DRAWN S.C.

REVIEWED E.L.

8-JKS-7.1

SKILLING, HELLE, CHRISTIANSEN, ROBERTSON — Structural & Civil Engineers

PROJECT: THE WORLD TRADE CENTER | TITLE: ONE WAY SLAB WITH W.W.F. SCHEDULE | DATE: 5-1-68

REVISIONS

10-21-68

SLAB MARK	SLAB t inch	SLAB TYPE note 1.	BOTTOM REINF'M'T. MAIN REINF. Size	MAIN REINF. Sp'g	TRANSV. REINF. Size	TRANSV. REINF. Sp'g in.	TOP REINFORCEMENT OVER SUPPORTS MAIN WIRES, Ts Size	Sp'g	TRANSV. WIRES Size	Sp'g	BETWEEN SUPPORTS MAIN WIRES, Tm Size	Sp'g	TRANSV. WIRES Size	Sp'g	ADDED TRANSV. AT PNL. ENDS, Te Size	Sp'g	REMARKS
L	6"	D	D-0.457	4"	D-0.351	9"	D-0.457	4"	D-0.351	9"	—						
M	6"	C	D-0.498	6"	D-0.351	9"	D-0.498	6"	D-0.351	9"	—						
P	8"	C	D-0.401	6"	D-0.382	8"	D-0.401	6"	D-0.382	8"	—						
Q	6"	D	D-0.457	4"	D-0.351	9"	D-0.457	4"	D-0.351	9"	—						
R	7"	D	D-0.480	3"	D-0.357	9"	D-0.480	3"	D-0.357	9"	—						
T	7"	D	D-0.40	3"	D-0.357	6"	D-0.40	3"	D-0.357	6"	—						
U	6"	C	D-0.415	6"	D-0.415	8"	D-0.415	6"	D-0.415	8"	—						
V	6"	C	D-0.339	6"	D-0.339	8"	D-0.339	6"	D-0.339	8"	—						
W	8"	D	D-0.431	3"	D-0.357	6"	D-0.431	3"	D-0.357	6"	—						
X	6"	D	D-0.484	3"	D-0.456	6"	D-0.484	3"	D-0.456	6"	—						
Y	6"	D	D-0.351	9"	D-0.351	9"	D-0.351	9"	D-0.351	9"	—						
Z	6"	C	D-0.437	6"	D-0.351	9"	D-0.437	6"	D-0.351	9"	—						
P-1	5½"	C	D-0.502	4"	D-0.275	6"	D-0.502	4"	D-0.275	6"	—						
P-2	5½"	C	D-0.455	3"	D-0.275	6"	D-0.455	3"	D-0.275	6"	—						

LICENSED PROFESSIONAL ENGINEER — LESLIE E. ROBERTSON — No. 34360 — UNIVERSITY OF THE STATE OF NEW YORK

Notes:

For notes see 8-JK5-7.1

DESIGNED

DRAWN

REVIEWED

8-JK5-7.2

SKILLING, HELLE, CHRISTIANSEN, ROBERTSON — Structural & Civil Engineers

PROJECT: THE WORLD TRADE CENTER | TITLE: ONE WAY SLAB WITH W.W.F. SCHEDULE | DATE: 12-18-68

REVISIONS
5-5-69

SLAB MARK	SLAB t inch	SLAB TYPE note 1	BOTTOM REINF'M'T. MAIN REINF. Size	MAIN REINF. Spcg.	TRANSV. REINF. Size	TRANSV. REINF. Spcg. in.	TOP REINFORCEMENT OVER SUPPORTS MAIN WIRES Ts Size	MAIN WIRES Ts Spcg.	TRANSV. WIRES Size	TRANSV. WIRES Spcg.	BETWEEN SUPPORTS MAIN WIRES Tm Size	MAIN WIRES Tm Spcg.	BETWEEN SUPPORTS TRANSV. WIRES Size	TRANSV. WIRES Spcg.	ADDED TRANSV. AT PNL ENDS Te Size	ADDED TRANSV. AT PNL ENDS Te Spcg.	REMARKS
S-1	6"	D	D-0.492	4"	D-0.38	9"	D-0.492	4"	D-0.38	9"	—						
S-2	7	D	D-0.450	3	D-0.38	9	D-0.450	3	D-0.38	9	—						
S-3	8	D	D-0.492	3	D-0.383	8	D-0.492	3	D-0.383	8	—						
S-4	8	D	D-0.438	4	D-0.383	8	D-0.438	4	D-0.383	8	—						
S-5	8	D	D-0.438	4	D-0.383	8	D-0.438	4	D-0.383	8	—						
S-6	7	D	D-0.497	5	D-0.38	9	D-0.497	5	D-0.38	9	—						
S-7	7	D	D-0.468	4	D-0.38	9	D-0.468	4	D-0.38	9	—						
S-8	6	D	D-0.459	4	D-0.38	9	D-0.459	4	D-0.38	9	—						
S-9	6	D	D-0.494	5	D-0.38	9	D-0.494	5	D-0.38	9	—						
S-10	6	D	D-0.475	5	D-0.38	9	D-0.475	5	D-0.38	9	—						
S-11	6	D	D-0.449	4	D-0.437	6	D-0.449	4	D-0.437	6	—						
S-14	6	D	D-0.464	3	D-0.38	9	D-0.464	3	D-0.38	9	—						
S-15	6	D	D-0.357	4	D-0.357	4	D-0.357	4	D-0.357	4	—						
S-16	6	D	D-0.357	4	D-0.357	4	D-0.357	4	D-0.357	4	—						
S-17	8	D	D-0.500	4	D-0.437	6	D-0.500	4	D-0.437	6	—						
S-18	8	D	D-0.495	3	D-0.383	8	D-0.495	3	D-0.383	8	—						

Note
For notes see 8-JK5-7.1

LICENSED PROFESSIONAL ENGINEER — LESLIE E. ROBERTSON — No. 34300 — UNIVERSITY OF THE STATE OF NEW YORK

DESIGNED
DRAWN S.C.
REVIEWED J.M. & E.L.

8-JK5-7.3

SKILLING - HELLE - CHRISTIANSEN - ROBERTSON Structural & Civil Engineers

PROJECT THE WORLD TRADE CENTER | TITLE ENCASEMENT OF COLUMN BASE PLATES | DATE 5-1-68

REVISIONS
10-6-69
10-15-69

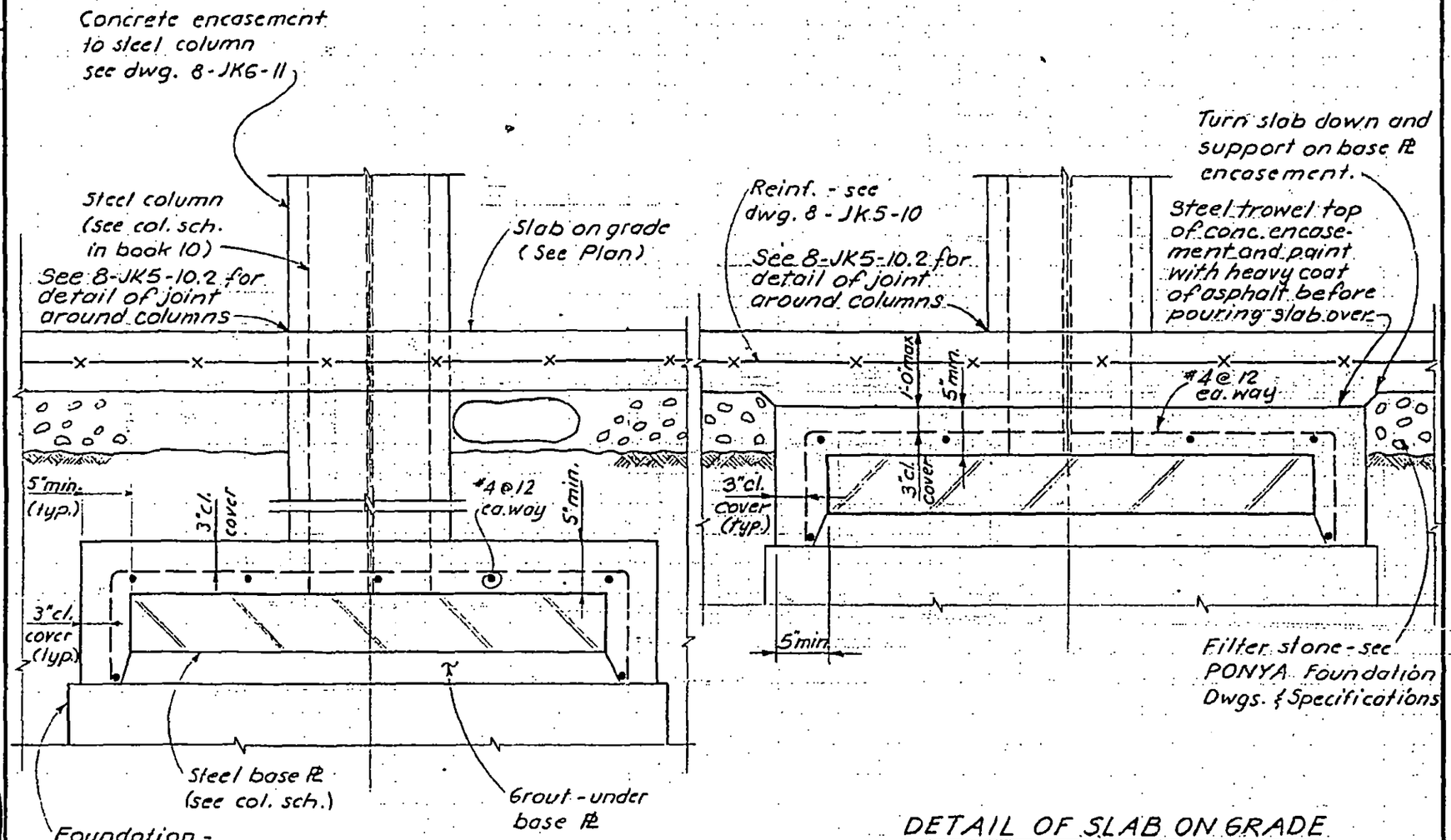

TYPICAL DETAIL OF CONCRETE ENCASEMENT OF BASE PLATES

(where top of col. base Pl is more than 1'-5" below top of slab.)

DETAIL OF SLAB ON GRADE AT COLUMN BASES

(where top of col. base Pl is 1'-5" or less below top of slab.)

NOTES:

1. See PONYA dwg. for top elevation of foundations.

LICENSED PROFESSIONAL ENGINEER · LESLIE E. ROBERTSON · No. 34360 · UNIVERSITY OF THE STATE OF NEW YORK

DRAWN S.C.

REVIEWED E.L.

8-JK5.9

SKILLING, HELLE, CHRISTIANSEN, ROBERTSON — Structural & Civil Engineers

PROJECT: THE WORLD TRADE CENTER | TITLE: COLUMN BASE PLATE AND FOOTING | DATE: 12-10-71

REVISIONS

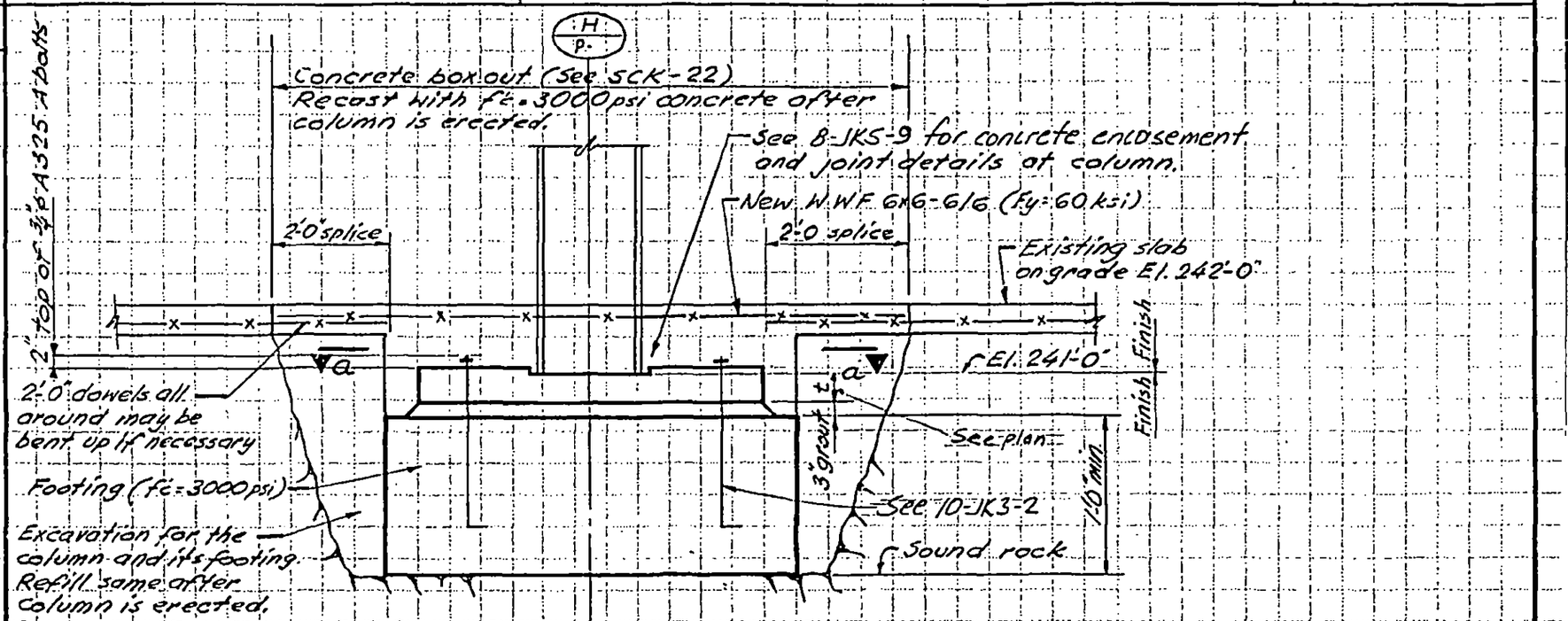

Detail A

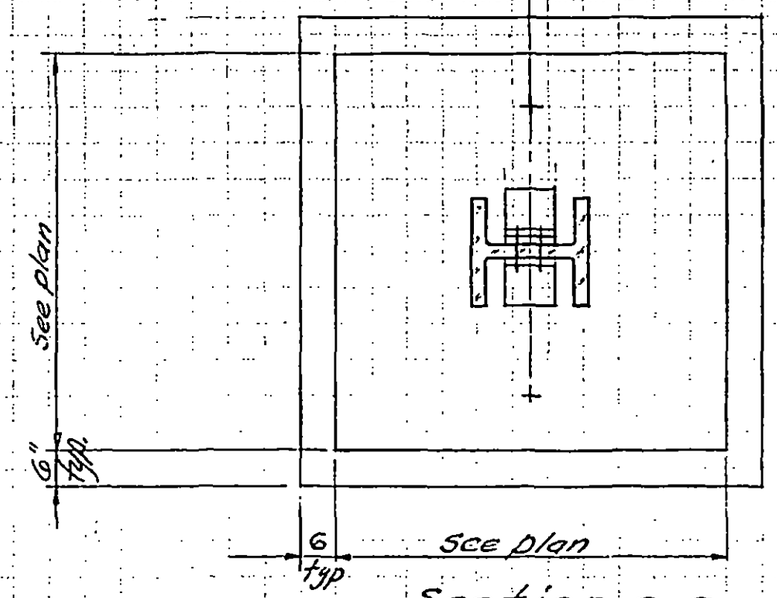

Section a-a

LICENSED PROFESSIONAL ENGINEER — LESLIE E. ROBERTSON — No 34360 — UNIVERSITY OF THE STATE OF NEW YORK

DESIGNED: KC

DRAWN: J. Gricius

REVIEWED:

8-JK5-9.2

SKILLING, HELLE, CHRISTIANSEN, ROBERTSON — Structural & Civil Engineers

PROJECT: THE WORLD TRADE CENTER | TITLE: COLUMN BASE PLATE AND FOOTING | DATE: 12-10-71

REVISIONS

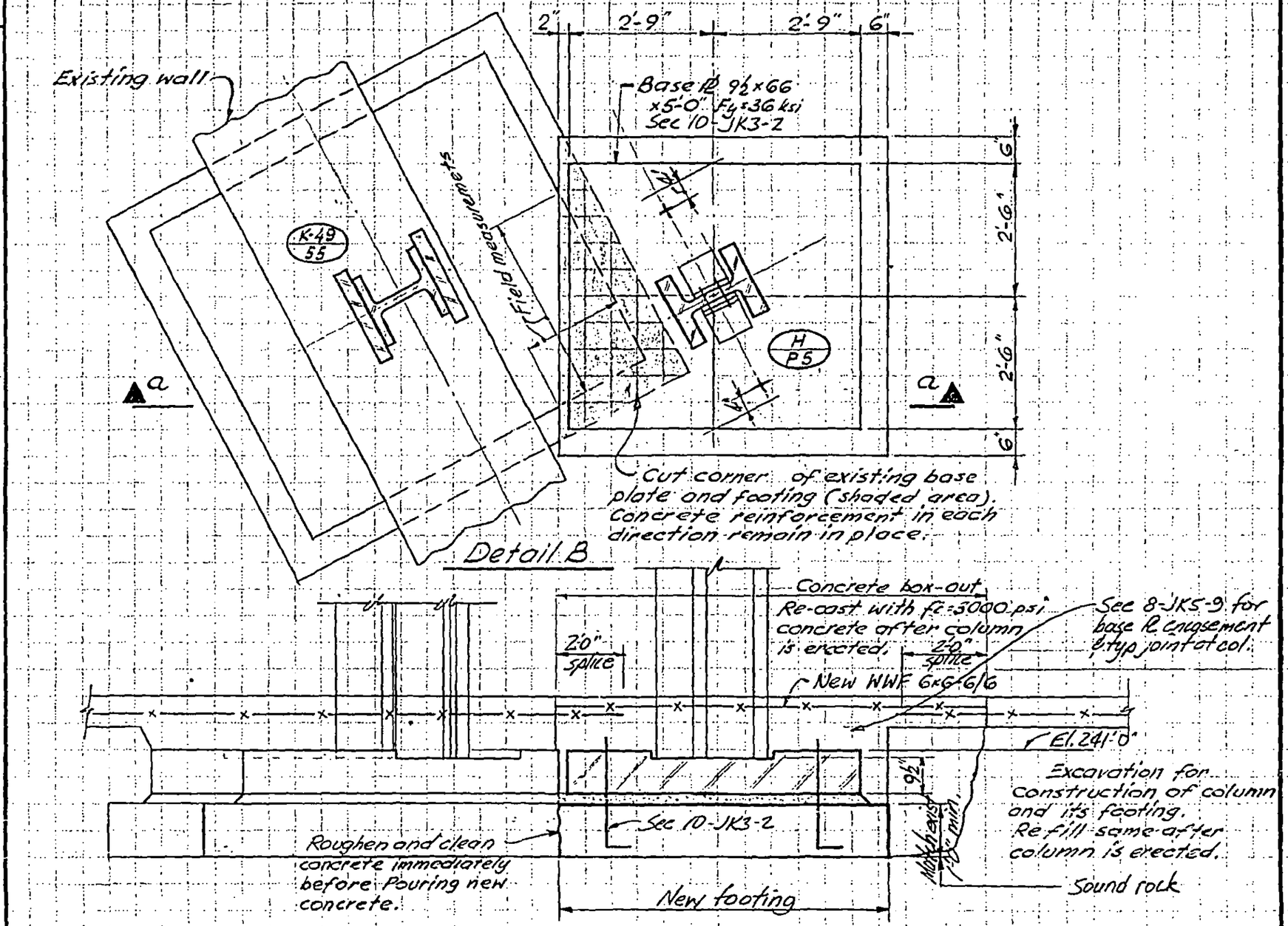

Section a-a

DESIGNED: K C

DRAWN: J. Gricius

REVIEWED:

8-JK5-9.3

SKILLING, HELLE, CHRISTIANSEN, ROBERTSON — Structural & Civil Engineers

PROJECT: THE WORLD TRADE CENTER | TITLE: WALL FOOTING | DATE: 12-10-71

REVISIONS

12/17/71

Box-out along new wall in slab on grade, its width be kept minimum in order to construct the wall and footing. Reinforsment shall be cut and placed as shown, and if necessary, the reinforcement may be bent until new slab is to be poured.

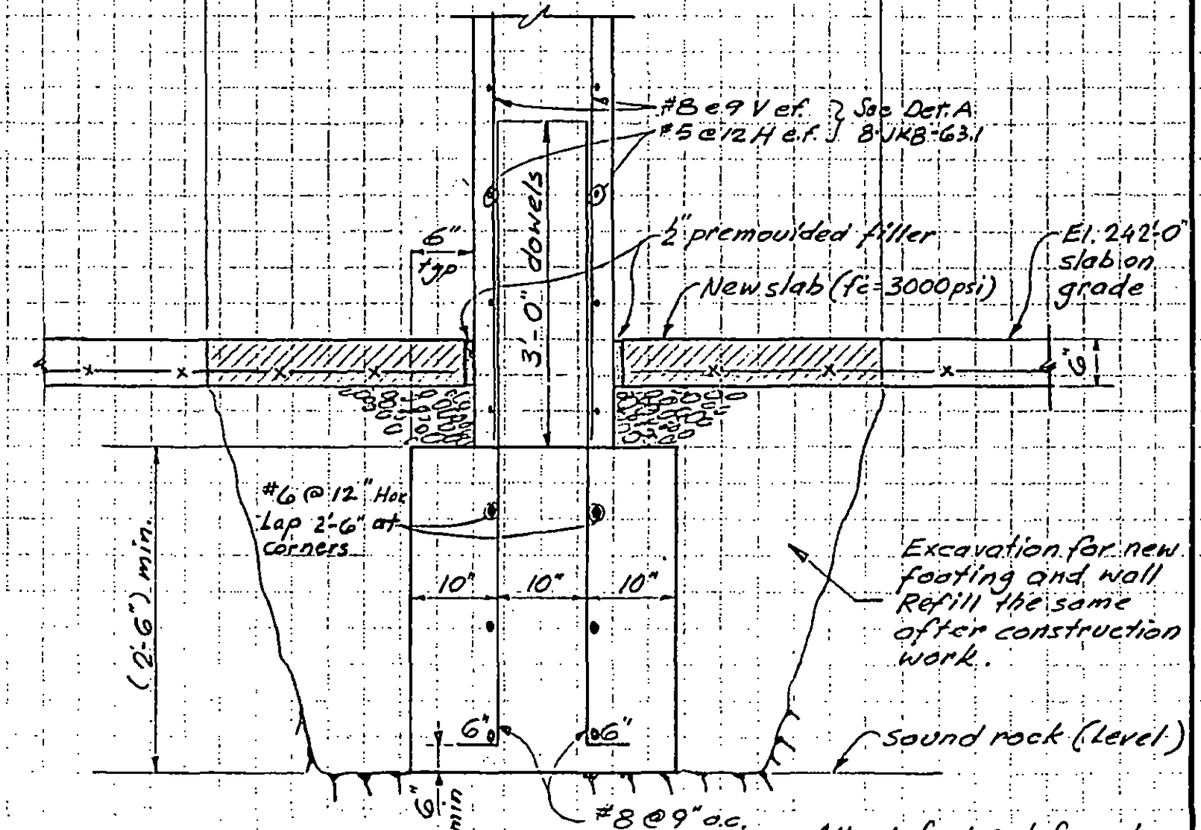

Section C-C

LICENSED PROFESSIONAL ENGINEER — LESLIE E. ROBERTSON — No. 34360 — UNIVERSITY OF THE STATE OF NEW YORK

DESIGNED: CK

DRAWN: J.G

REVIEWED:

8-JKS-9.4

SKILLING - HELLE - CHRISTIANSEN - ROBERTSON Structural & Civil Engineers

PROJECT THE WORLD TRADE CENTER | TITLE TYPICAL SLAB ON GRADE DETAILS | DATE 5-1-68

REVISIONS

10-6-69 GEN. REV.

See Plan & Det 1 on 8-JK5-10.3 for detail of slab to wall connection other than shown

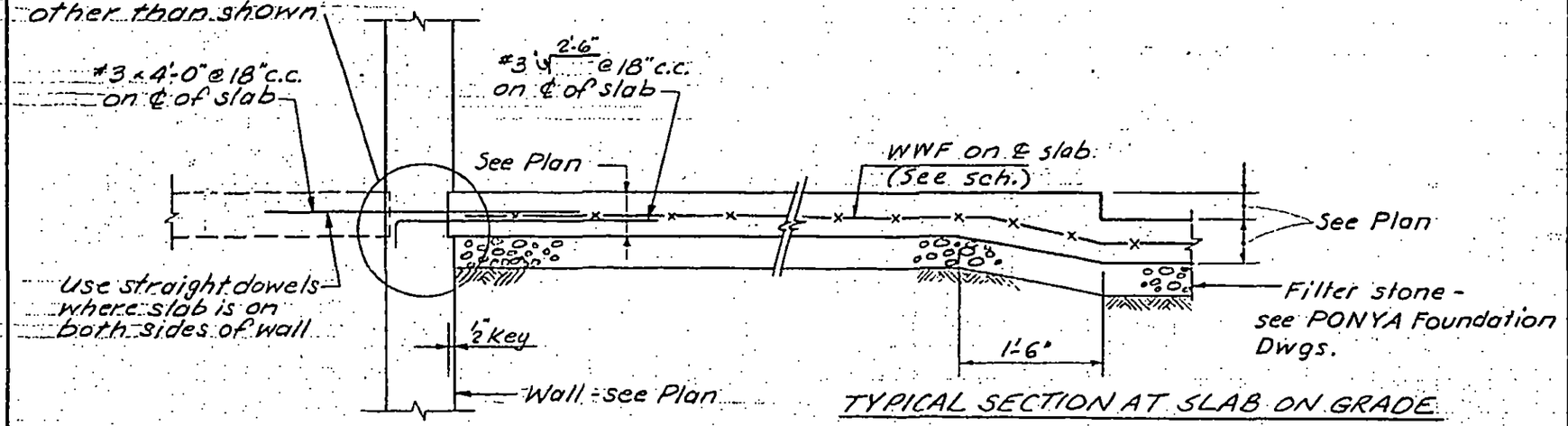

TYPICAL SECTION AT SLAB ON GRADE

SCHEDULE	
Slab thickn. t	W. W. F. REINFORCING
3"	6 x 6 - 10/10
6"	6 x 6 - 6/6
8"	6 x 6 - 4/4
10"	6 x 6 - 3/3
12"	4 x 4 - 4/4
Over 12"	1 layer of 4 x 4 - 4/4 for each 12" or portion thereof of slab thickness

LICENSED PROFESSIONAL ENGINEER LESLIE E. ROBERTSON No. 34360 UNIVERSITY OF THE STATE OF NEW YORK

DRAWN S.C.

REVIEWED E.L.

8 - JK5 - 10.1

SKILLING, HELLE, CHRISTIANSEN, ROBERTSON — Structural & Civil Engineers

PROJECT THE WORLD TRADE CENTER | TITLE JOINT DETAILS FOR SLAB ON GRADE | DATE 10-6-69

REVISIONS

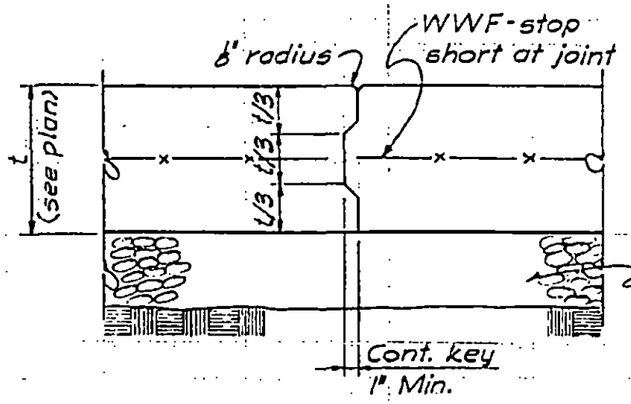

TYPICAL CONTROL JOINT DETAIL

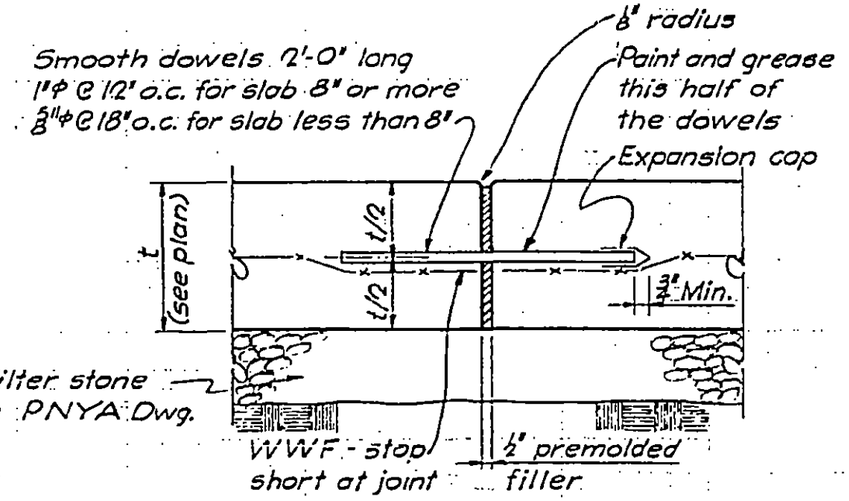

TYPICAL EXPANSION JOINT DETAIL

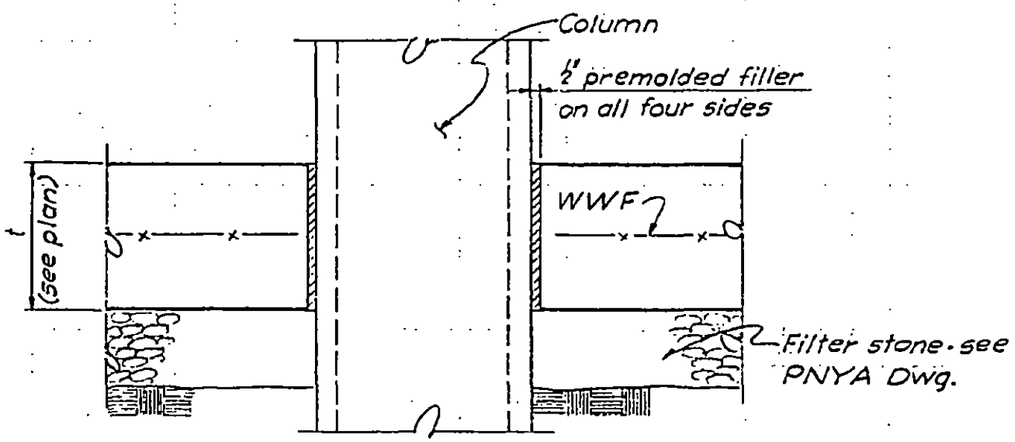

TYPICAL JOINT DETAIL AT COLUMN

LICENSED PROFESSIONAL ENGINEER LESLIE E. ROBERTSON No. 34360 UNIVERSITY OF THE STATE OF NEW YORK

DESIGNED

DRAWN G.K.

REVIEWED E.L.

8-JK5-10.2

SKILLING, HELLE, CHRISTIANSEN, ROBERTSON — Structural & Civil Engineers

PROJECT THE WORLD TRADE CENTER | TITLE JOINT DETAILS FOR SLAB ON GRADE | DATE 10-6-69

REVISIONS

12-12-69

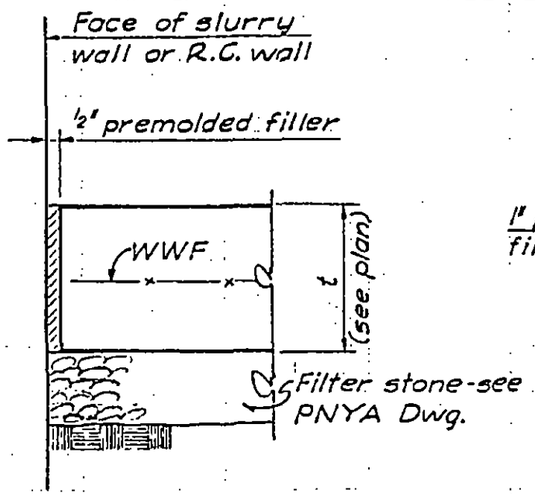

DETAIL 1

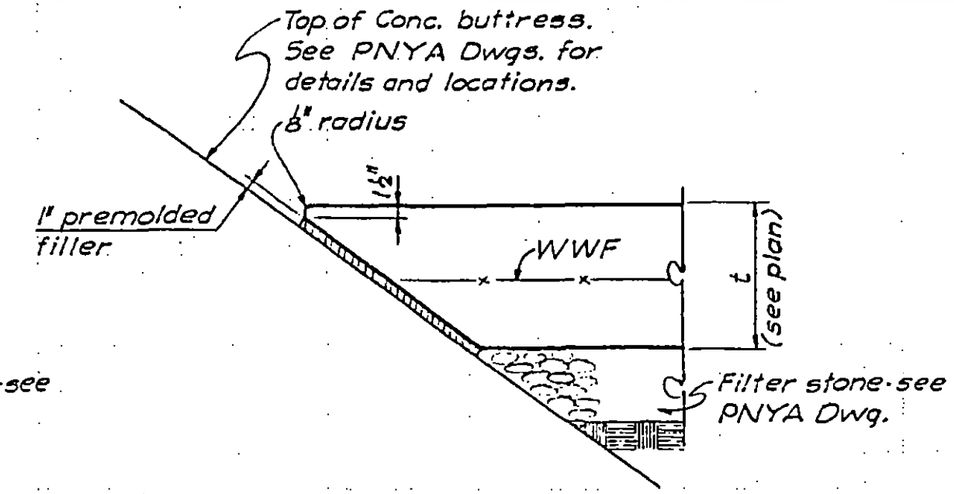

DETAIL 2

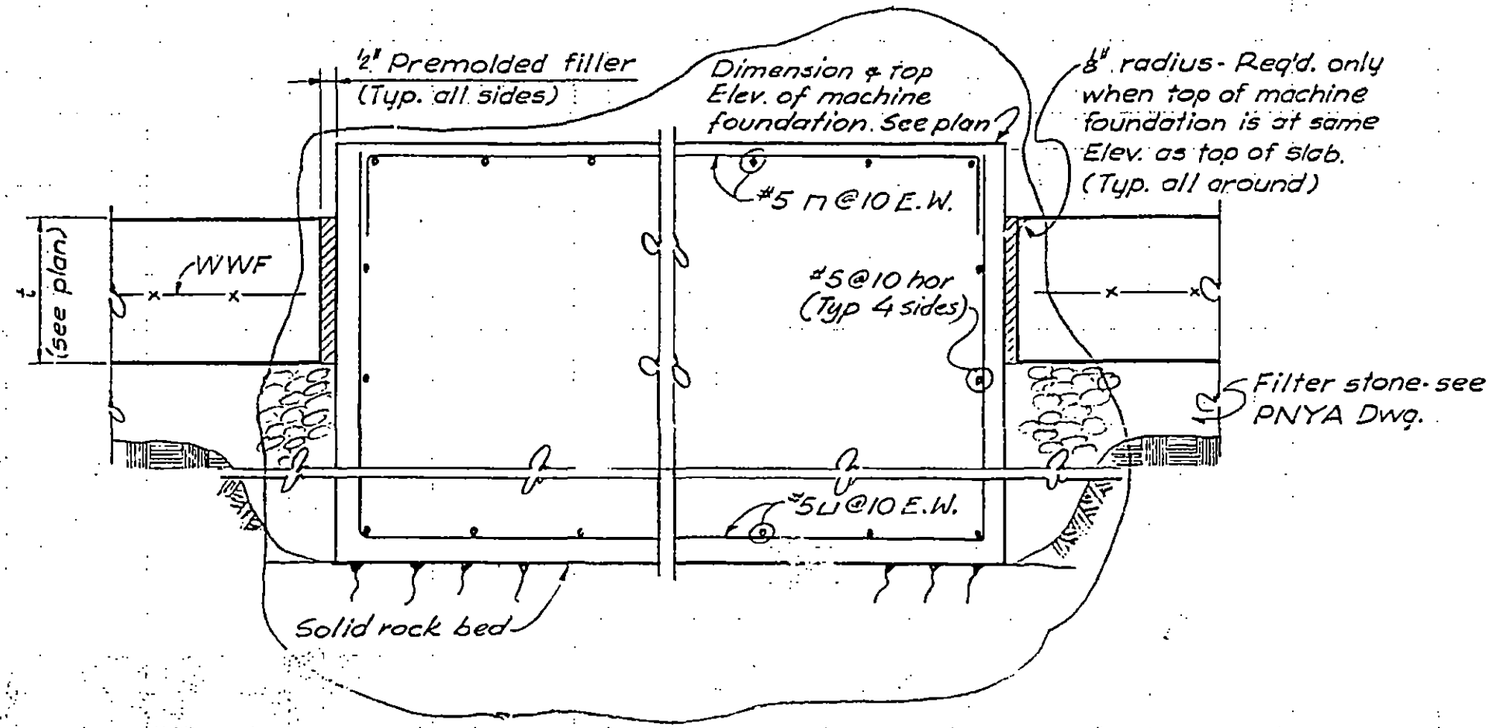

DETAIL 3

LICENSED PROFESSIONAL ENGINEER LESLIE E. ROBERTSON No. 34360 UNIVERSITY OF THE STATE OF NEW YORK

DESIGNED

DRAWN G.K.

REVIEWED E.L.

8-JK5-10.3

SKILLING, HELLE, CHRISTIANSEN, ROBERTSON — Structural & Civil Engineers

PROJECT THE WORLD TRADE CENTER | TITLE CONCRETE SUPPORT (FOR PIPES | DATE 10-6-69

REVISIONS

12-12-69

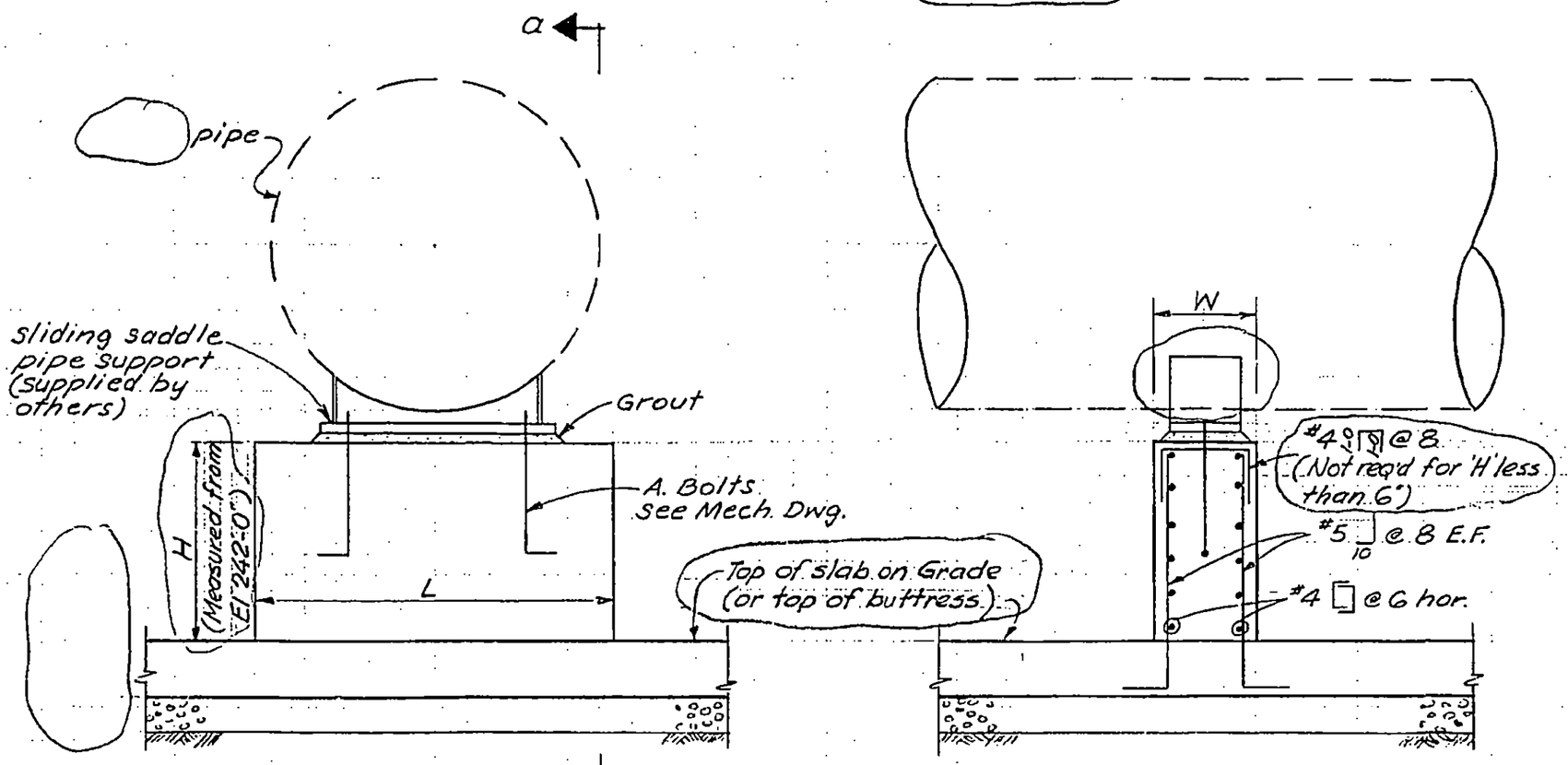

Section a-a

MK	Diam. of pipe	Max. load	Concrete support L	W	H
*	60"	24.2K	4'-6"	1'-8"	*
▲S-43	30	8.2	3'-6"	1'-8"	0'-11 3/8"
▲S-44	36	11.3	4'-2"	2'-0"	0'-5 3/8"
▲S-45	24	5.6	2'-10"	1'-4"	1'-2 3/8"
▲S-46	30	8.2	3'-6"	1'-8"	0'-8 3/8"
▲S-47	30	8.2	3'-6"	1'-8"	0'-5 3/8"
▲S-48	24	5.6	2'-10"	1'-4"	0'-8 3/8"
▲S-49	24	5.6	2'-10"	1'-4"	3'-8 3/8"
▲S-50	24"	5.6K	2'-10"	1'-4"	2'-2 7/8"
▲S-51	24	5.6K	2'-10"	1'-4"	2'-2 7/8"

* See Sand-Courter dwgs. SC-R-9, SC-R-12 and S7R-125 for location and height (H) of conc. support.

▲ See Sand-Courter dwgs. SC-R-3, SC-R-4, and R-1 thru R-9 for location and other information.

All concrete to be f'c=3000 psi

8-JKS-10.4

LICENSED PROFESSIONAL ENGINEER — LESLIE E. ROBERTSON — No. 34380 — UNIVERSITY OF THE STATE OF NEW YORK

DESIGNED

DRAWN S.C.

REVIEWED E.L.

SKILLING, HELLE, CHRISTIANSEN, ROBERTSON — Structural & Civil Engineers

PROJECT THE WORLD TRADE CENTER | TITLE CONC. FTG. FOR 5000 GAL. CONDENSATE TANK | DATE 10-20-69

REVISIONS

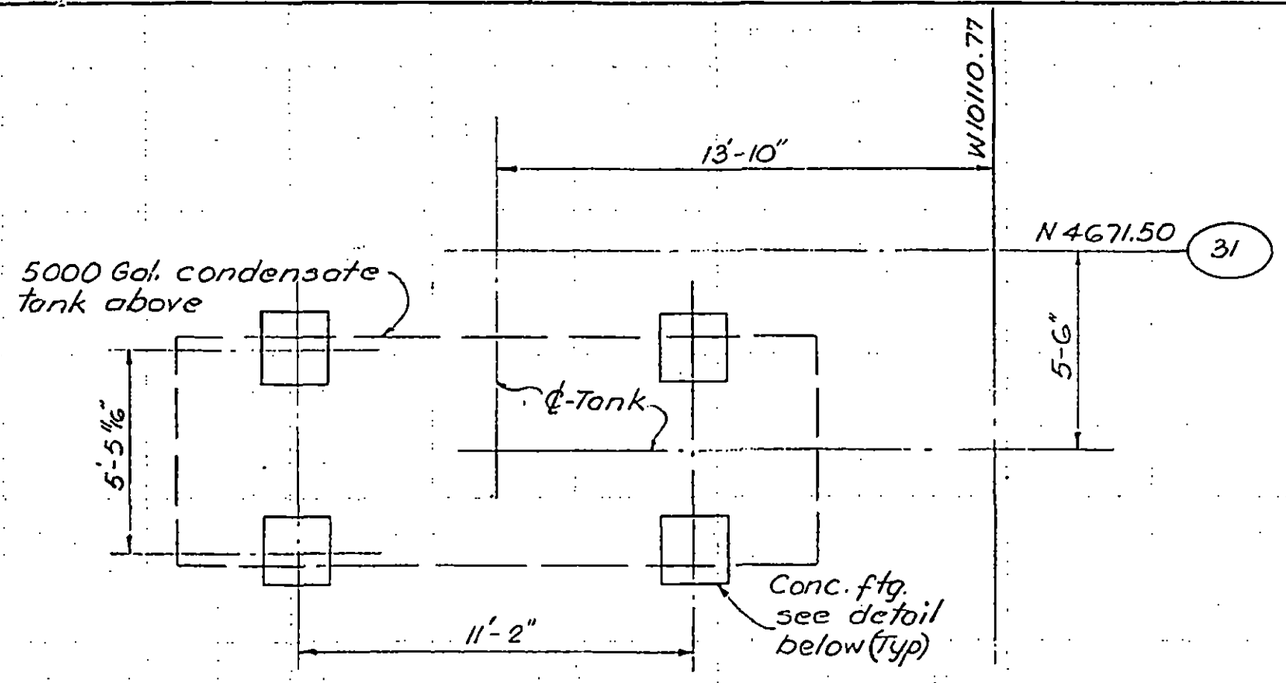

PLAN
(4"=1-0)

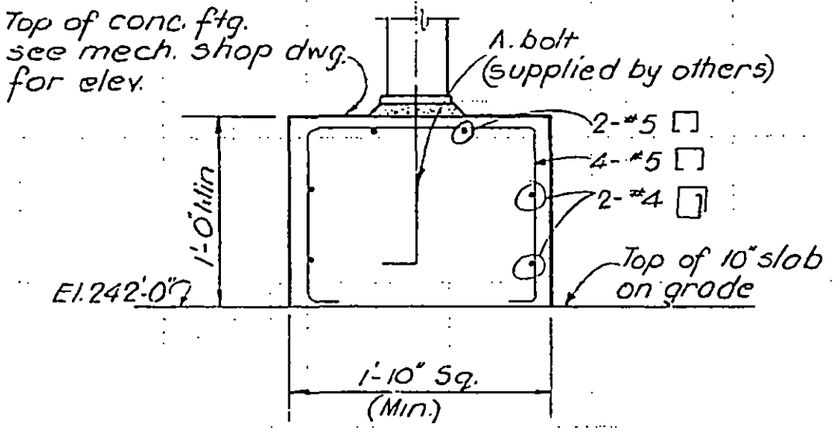

NOTES:
1. All conc. to be f'c = 3000 psi

LICENSED PROFESSIONAL ENGINEER — LESLIE E. ROBERTSON — No. 34360 — UNIVERSITY OF THE STATE OF NEW YORK

DESIGNED

DRAWN D.C. Huggins

REVIEWED E.L.

8-JK 5-10.5

SKILLING, HELLE, CHRISTIANSEN, ROBERTSON — Structural & Civil Engineers

PROJECT THE WORLD TRADE CENTER | TITLE REFRIGERATION ROOM-STORAGE TANK FOUNDATION | DATE 12-12-69

REVISIONS

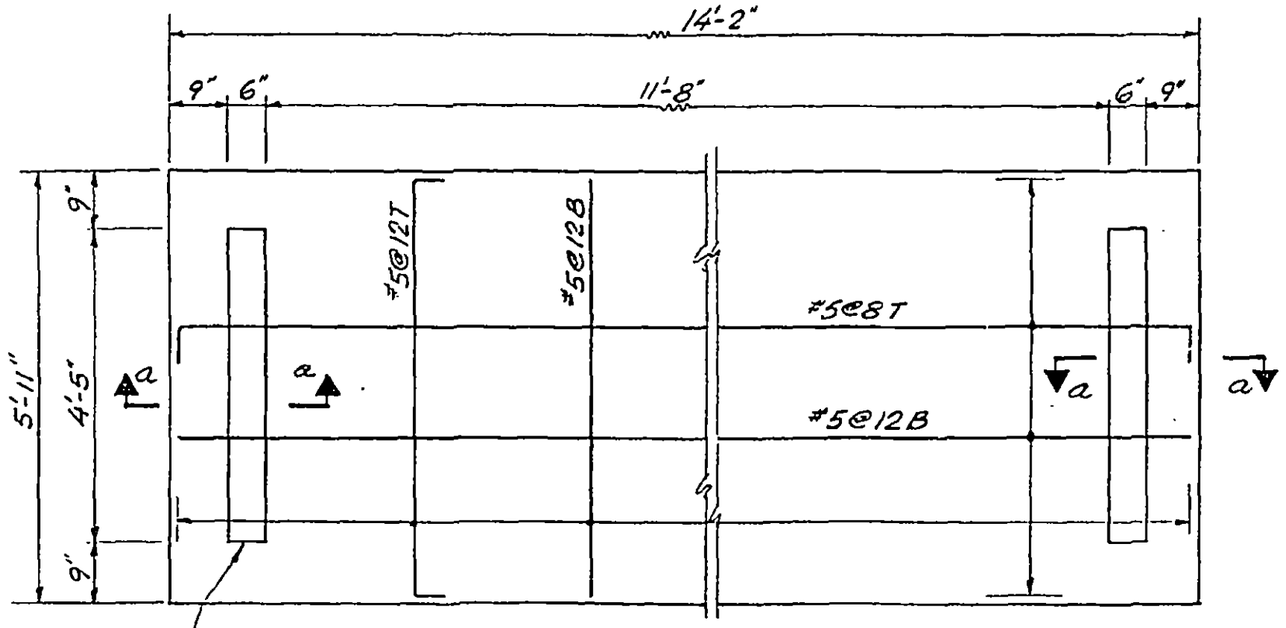

PLAN

1/2"=1'-0"

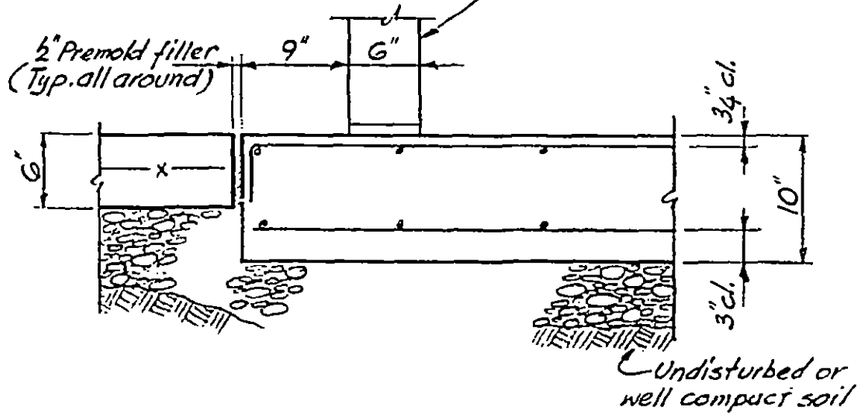

Section a-a

(1"=1'-0"

LICENSED PROFESSIONAL ENGINEER
LESLIE E. ROBERTSON
No. 34360
UNIVERSITY OF THE STATE OF NEW YORK

DESIGNED

DRAWN J. Gricius

REVIEWED E.L.

S-JK5-10.6

SKILLING, HELLE, CHRISTIANSEN, ROBERTSON — Structural & Civil Engineers

PROJECT: THE WORLD TRADE CENTER | TITLE: FOUNDATION UNDER EMERGENCY GENERATOR EG-1, EG-2 & EG-3 | DATE: 3-5-71

REVISIONS
4-22-71

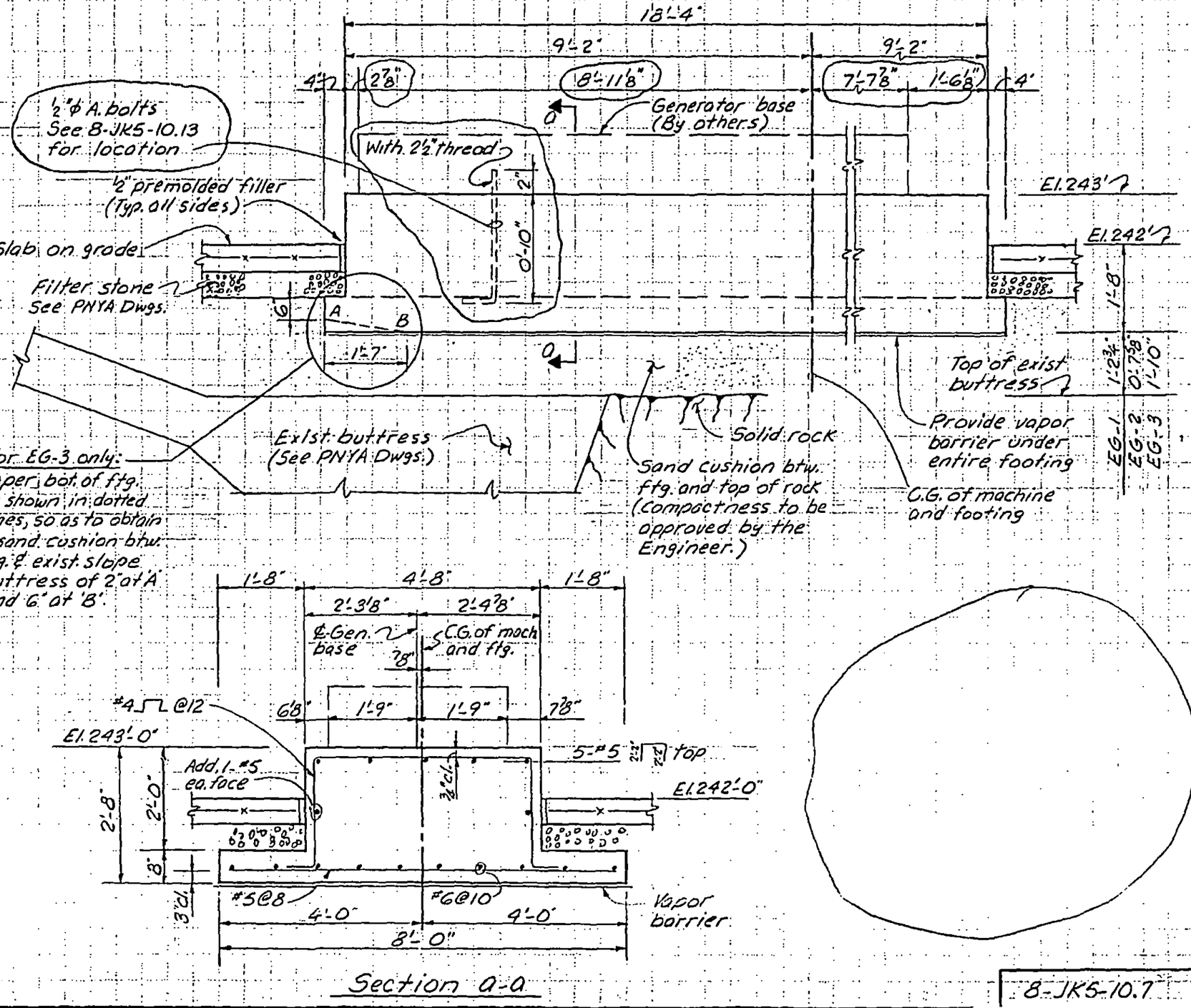

Section a-a

8-JK5-10.7

LICENSED PROFESSIONAL ENGINEER — LESLIE E. ROBERTSON — No. 34360 — UNIVERSITY OF THE STATE OF NEW YORK

DESIGNED: E. L.
DRAWN: A. FRANQUI
REVIEWED: E. L.

SKILLING, HELLE, CHRISTIANSEN, ROBERTSON — Structural & Civil Engineers

PROJECT: THE WORLD TRADE CENTER | TITLE: FOUNDATION UNDER EMERGENCY GENERATOR EG-4 | DATE: 3-5-71

REVISIONS
4-22-71

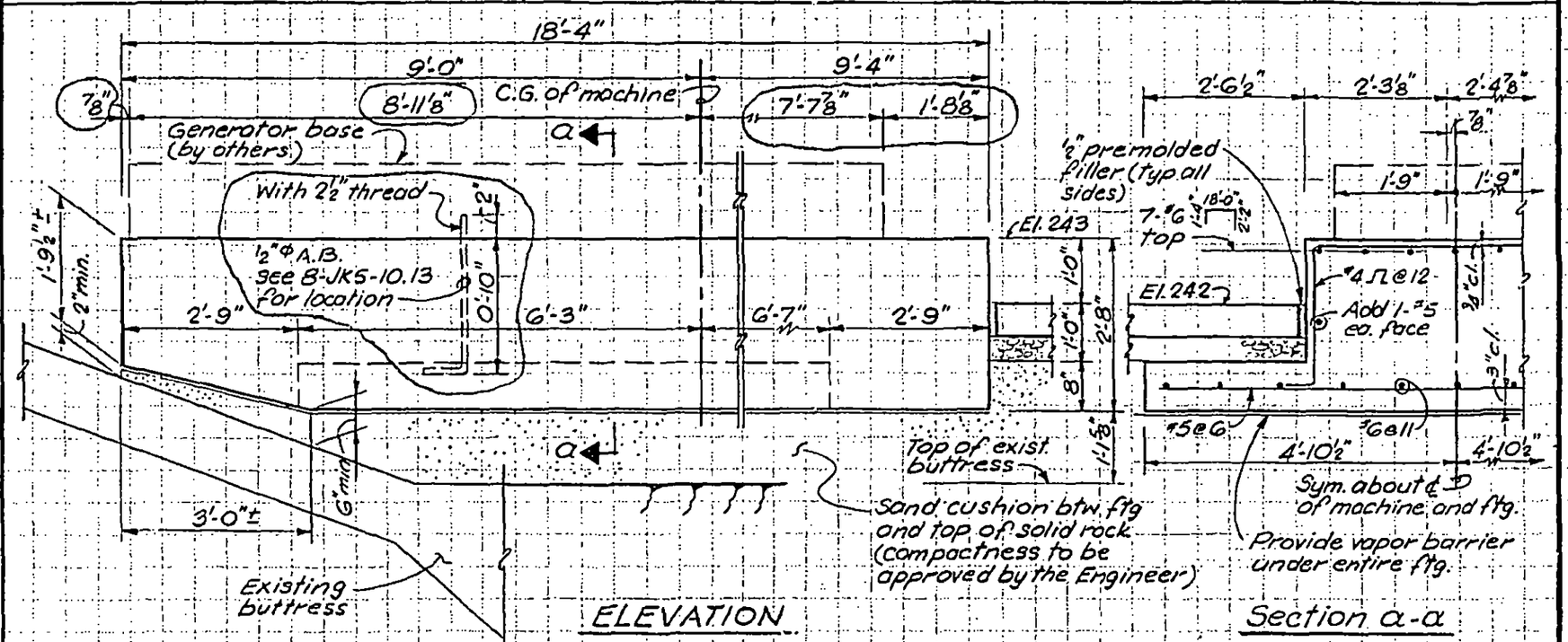

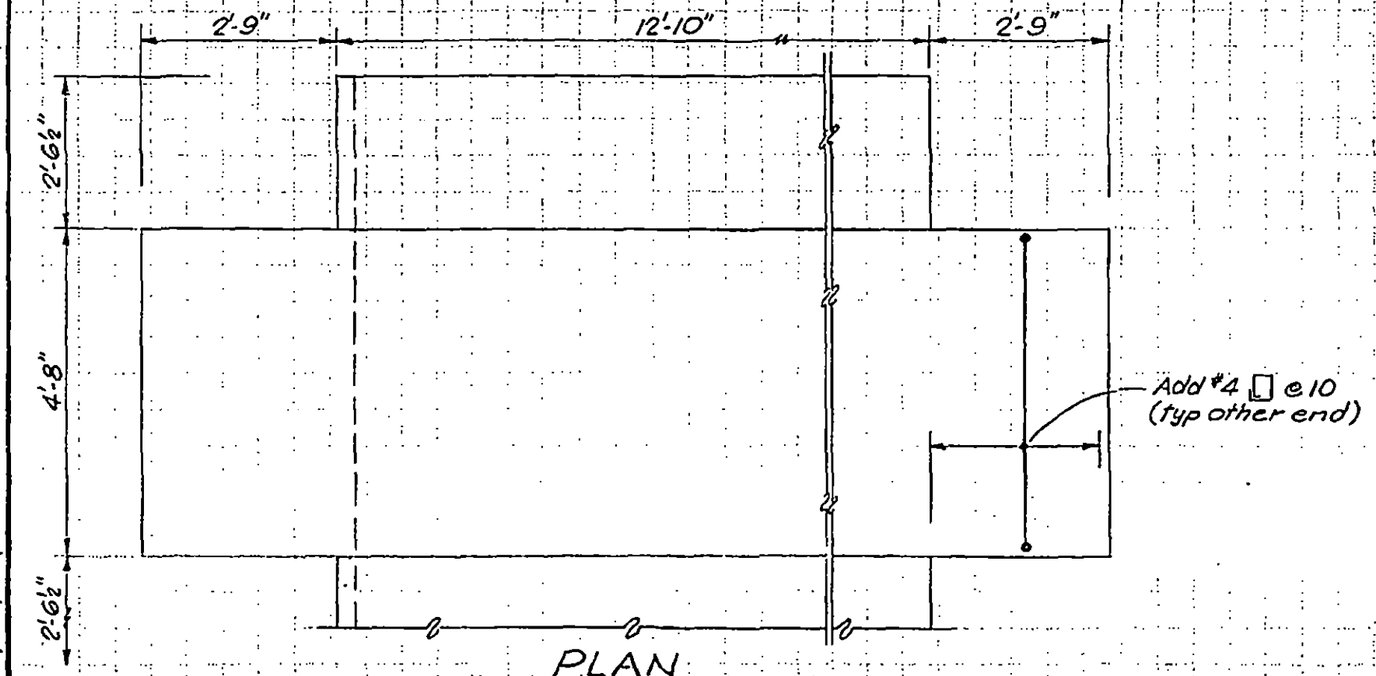

LICENSED PROFESSIONAL ENGINEER — LESLIE E. ROBERTSON — No. 34360 — UNIVERSITY OF THE STATE OF NEW YORK

DESIGNED: E.L.
DRAWN: S.C.
REVIEWED: E.L.

8-JK5-10.8

SKILLING, HELLE, CHRISTIANSEN, ROBERTSON — Structural & Civil Engineers

PROJECT: THE WORLD TRADE CENTER | TITLE: FOUNDATION UNDER EMERGENCY GENERATOR EG-5 | DATE: 3-5-71

REVISIONS

4-22-71

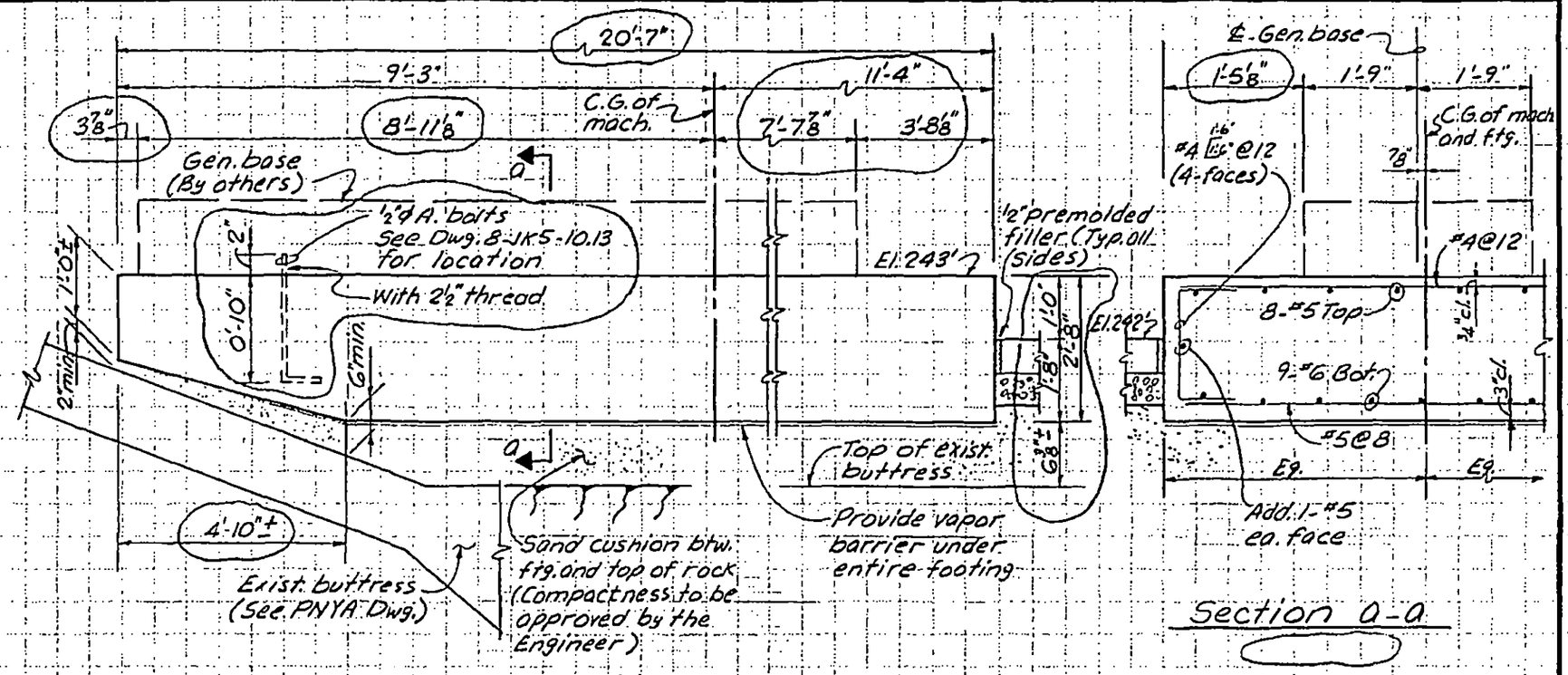

LICENSED PROFESSIONAL ENGINEER — LESLIE E. ROBERTSON — No. 34360 — UNIVERSITY OF THE STATE OF NEW YORK

DESIGNED: E.L.

DRAWN: A. FRANQUI

REVIEWED: E.L.

8-JK5-10.9

SKILLING, HELLE, CHRISTIANSEN, ROBERTSON — Structural & Civil Engineers

PROJECT: THE WORLD TRADE CENTER | TITLE: FOUNDATION UNDER TEL CO GENERATORS DG-1, DG-3, DG-4 & DG-5 | DATE: 4-1-71

REVISIONS

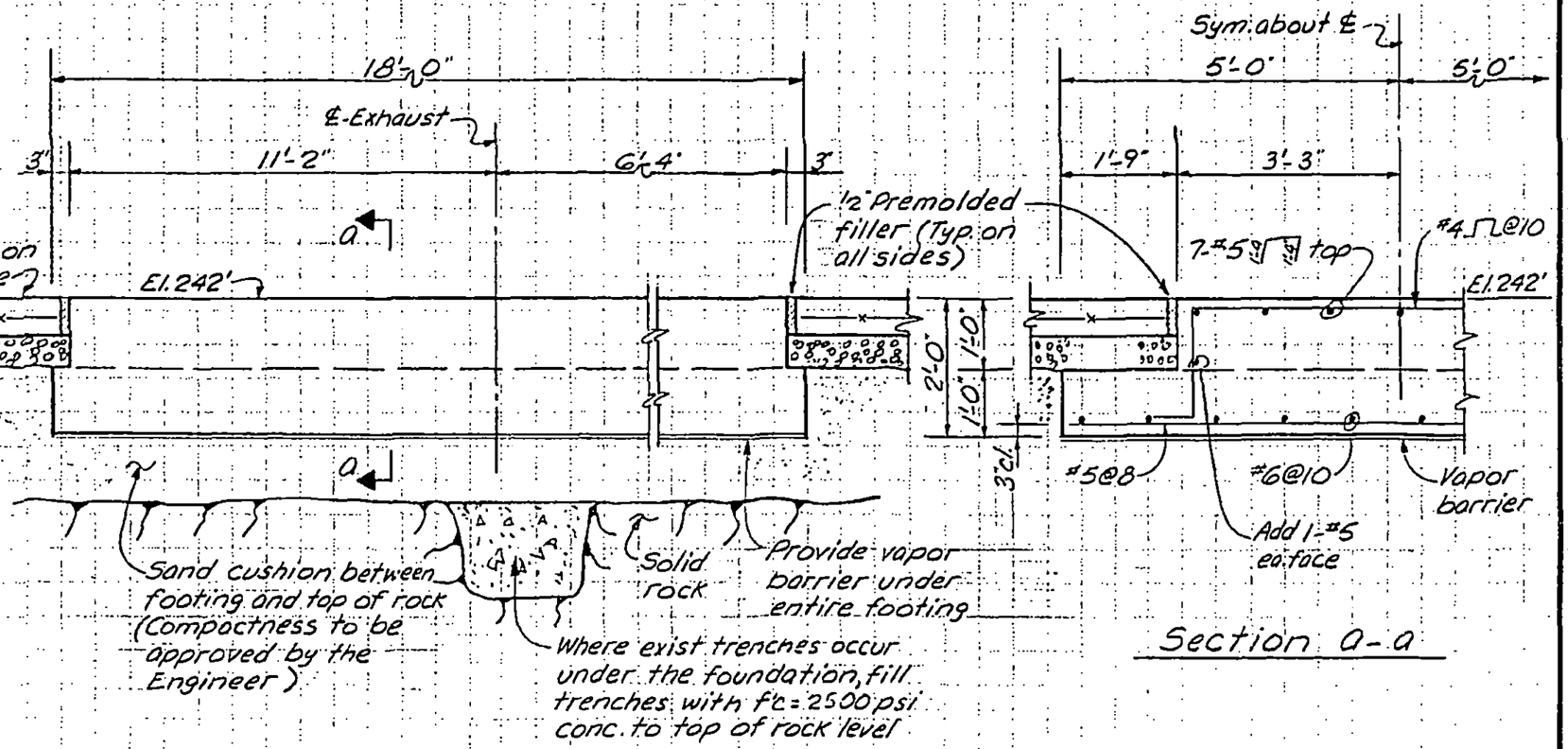

Section a-a

Notes:

1. Foundation layouts are based on POPE, EVANS & ROBBINS Dwg. M-101 (8-1-70)
2. Pads for Diesel-Generators are based on WHITE MOTOR CORP MACHINE as shown on POPE, EVANS & ROBBINS Dwg. SK-383-51 (Rev. date 12-10-69)
3. No anchor bolts are required.

LICENSED PROFESSIONAL ENGINEER — LESLIE E. ROBERTSON — No. 34360 — UNIVERSITY OF THE STATE OF NEW YORK

DESIGNED: E. LIU

DRAWN: A. FRANQUI

REVIEWED:

8-JKS-10.10

SKILLING, HELLE, CHRISTIANSEN, ROBERTSON — Structural & Civil Engineers

PROJECT: THE WORLD TRADE CENTER | TITLE: FOUNDATION UNDER TELCO GENERATOR DG-2 | DATE: 4-1-71

REVISIONS

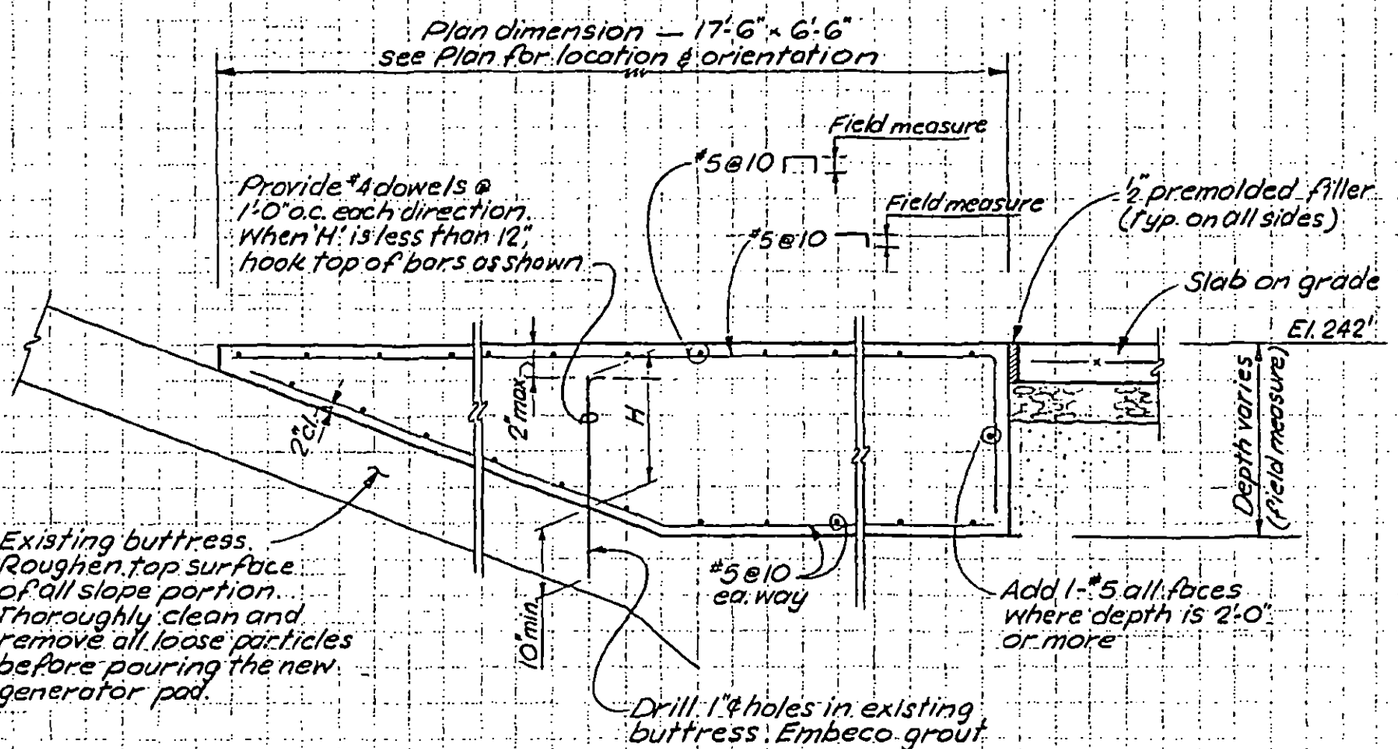

See Notes on 8-JK5-10.10

LICENSED PROFESSIONAL ENGINEER — LESLIE E. ROBERTSON — No. 34360 — UNIVERSITY OF THE STATE OF NEW YORK

DESIGNED: E.L.

DRAWN: S.C.

REVIEWED:

8-JK5-10.11

SKILLING, HELLE, CHRISTIANSEN, ROBERTSON — Structural & Civil Engineers

PROJECT THE WORLD TRADE CENTER | TITLE DETAIL OF CONC. PROTECTION AROUND OIL SEPARATOR | DATE 4-1-71

REVISIONS

(ZONE K-1)

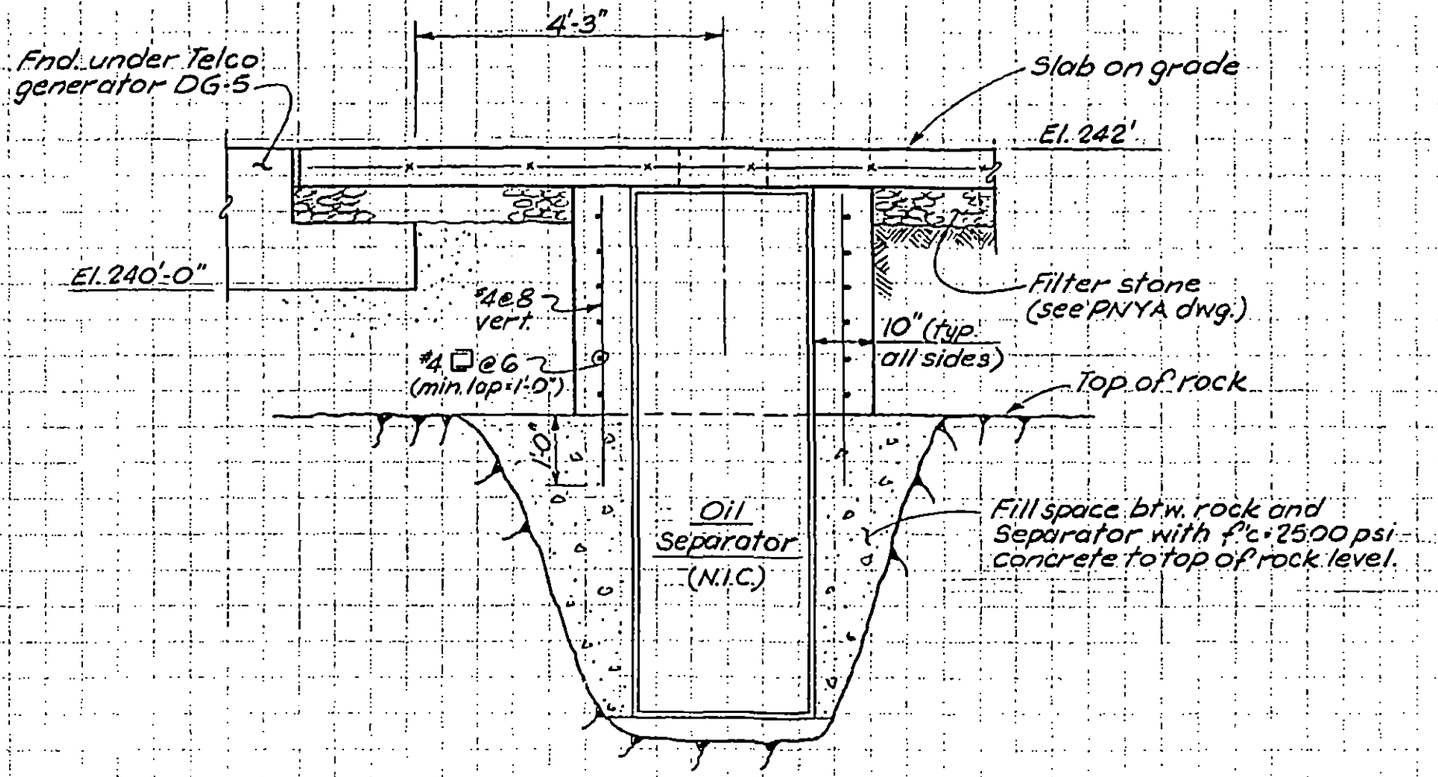

LICENSED PROFESSIONAL ENGINEER — LESLIE E. ROBERTSON — No. 34560 — UNIVERSITY OF THE STATE OF NEW YORK

DESIGNED E.L.

DRAWN S.C.

REVIEWED

8-JK5-10.12

SKILLING, HELLE, CHRISTIANSEN, ROBERTSON — Structural & Civil Engineers

PROJECT: THE WORLD TRADE CENTER | TITLE: LOCATION OF A. BOLTS FOR EMERGENCY GEN. EG-1 THRU EG-5 | DATE: 4-22-71

REVISIONS

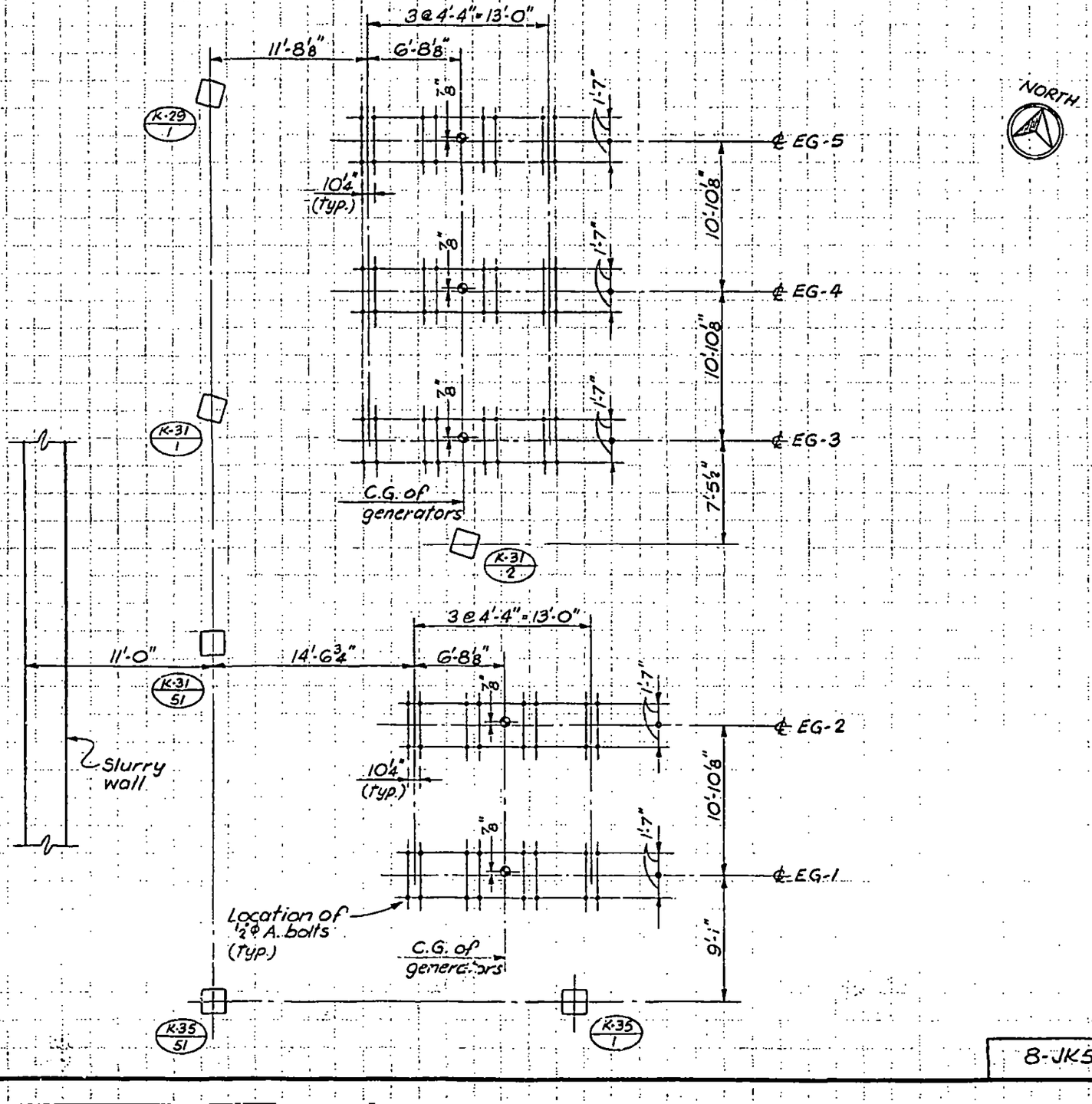

LICENSED PROFESSIONAL ENGINEER — LESLIE E. ROBERTSON — No. 34360 — UNIVERSITY OF THE STATE OF NEW YORK

DESIGNED: E.L.
DRAWN: S.C.
REVIEWED: E.L.

8-JK5-10.13

SKILLING - HELLE - CHRISTIANSEN - ROBERTSON Structural & Civil Engineers

PROJECT THE WORLD TRADE CENTER | TITLE TYPICAL COLUMN SHEAR-HEAD DETAIL @ EL 264' | DATE 5-1-68

REVISIONS

1-22-69

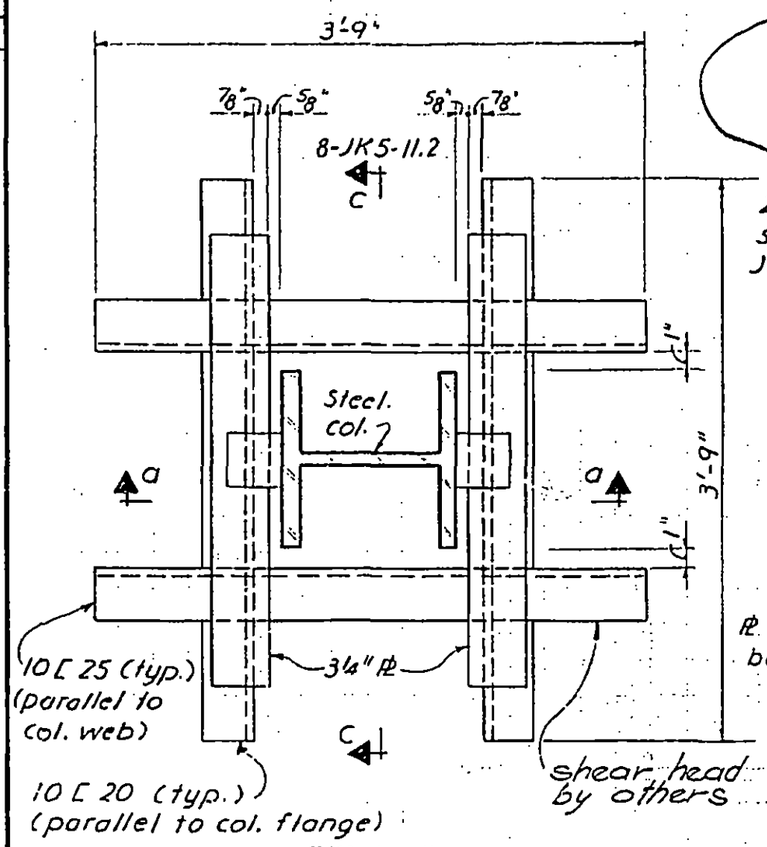

Plan

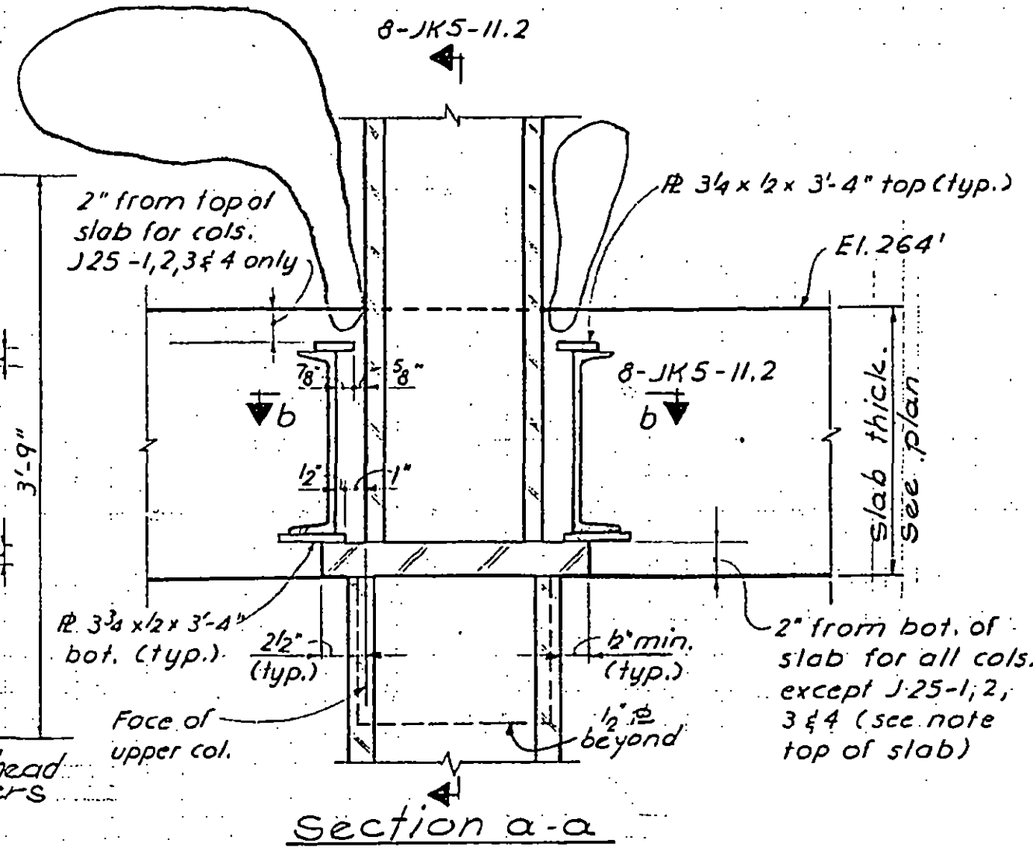

Section a-a

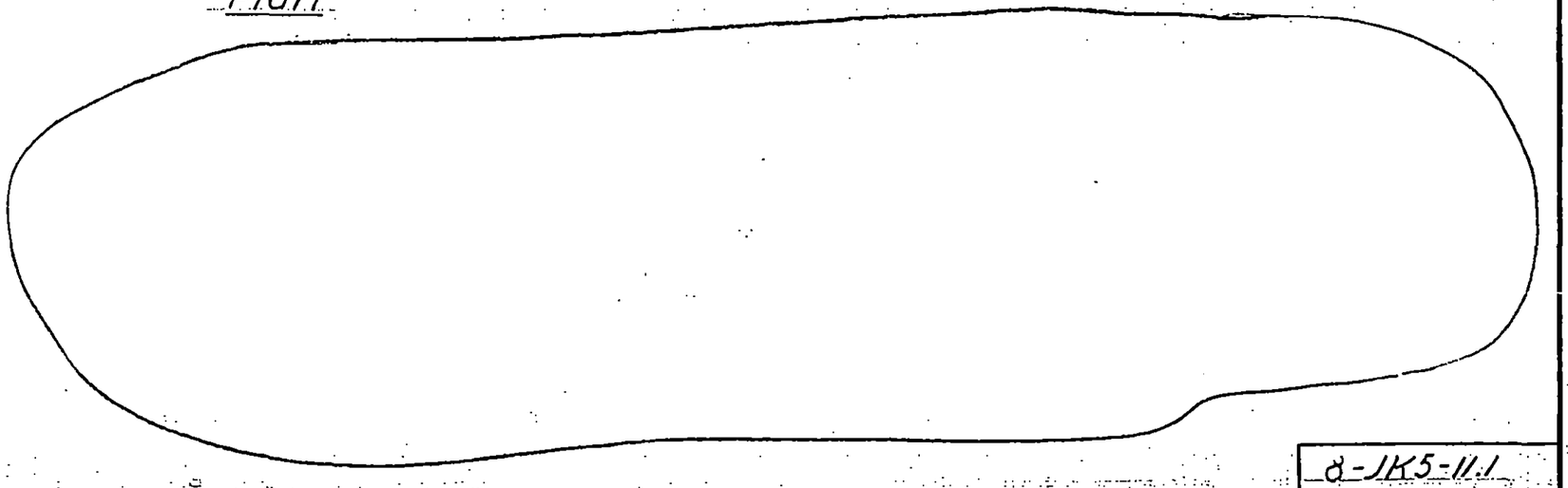

Drawn G.S.

Reviewed E.L.

8-JK5-11.1

SKILLING - HELLE - CHRISTIANSEN - ROBERTSON Structural & Civil Engineers

PROJECT THE WORLD TRADE CENTER | TITLE TYPICAL COLUMN SHEAR-HEAD DETAIL AT EL. 264' | DATE 5-1-68

REVISIONS

1-22-69

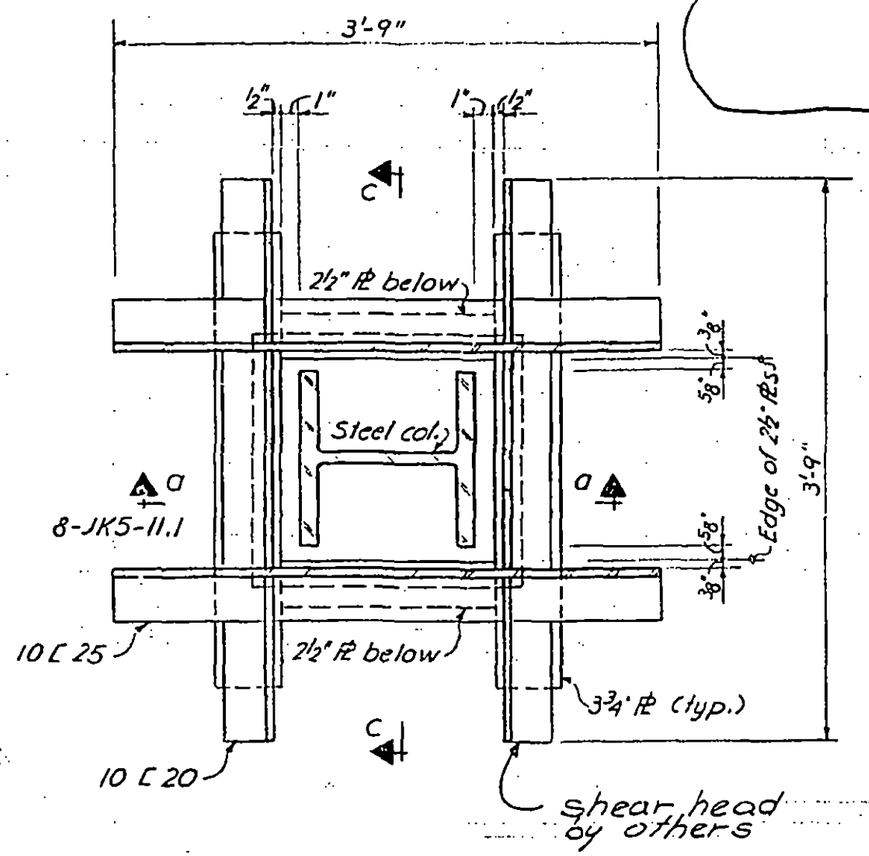

Section b-b

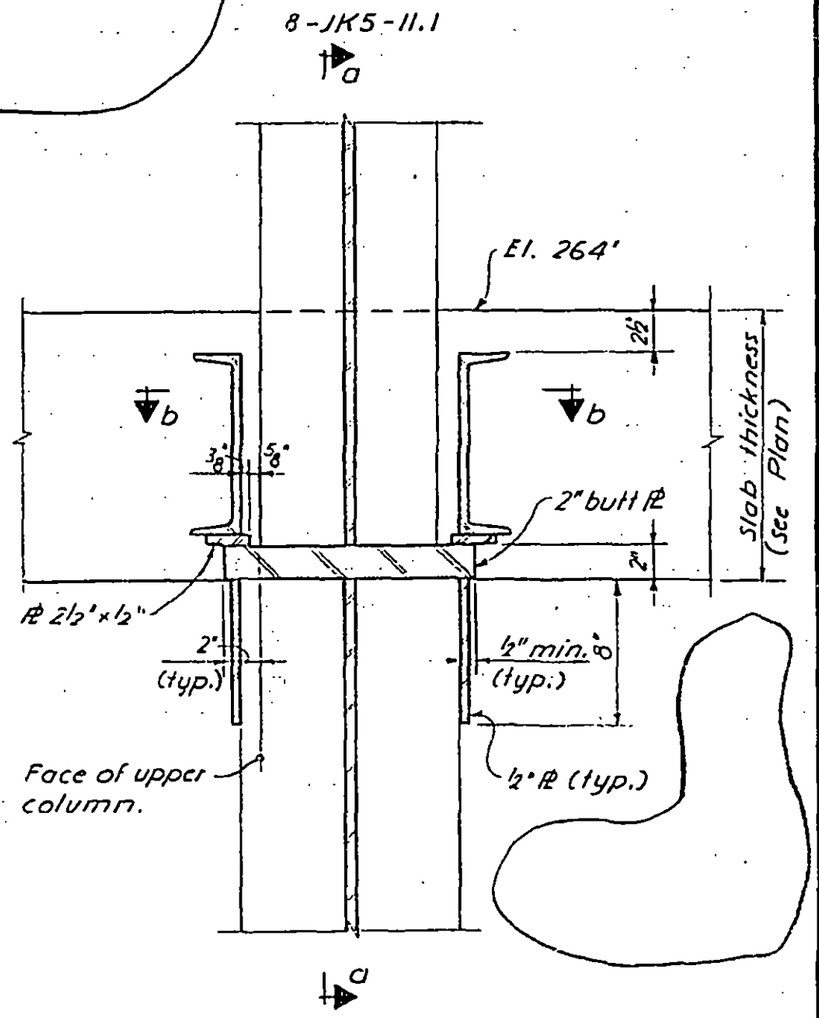

Section c-c

LICENSED PROFESSIONAL ENGINEER
LESLIE E. ROBERTSON
No. 34360
UNIVERSITY OF THE STATE OF NEW YORK

DRAWN S.C.

REVIEWED E.L.

8-JK5-11.2

SKILLING - HELLE - CHRISTIANSEN - ROBERTSON Structural & Civil Engineers

PROJECT THE WORLD TRADE CENTER | TITLE SHEAR HEAD DETAIL AT TRUSSES @ El. 264 | DATE 5-1-68

REVISIONS

1-22-69

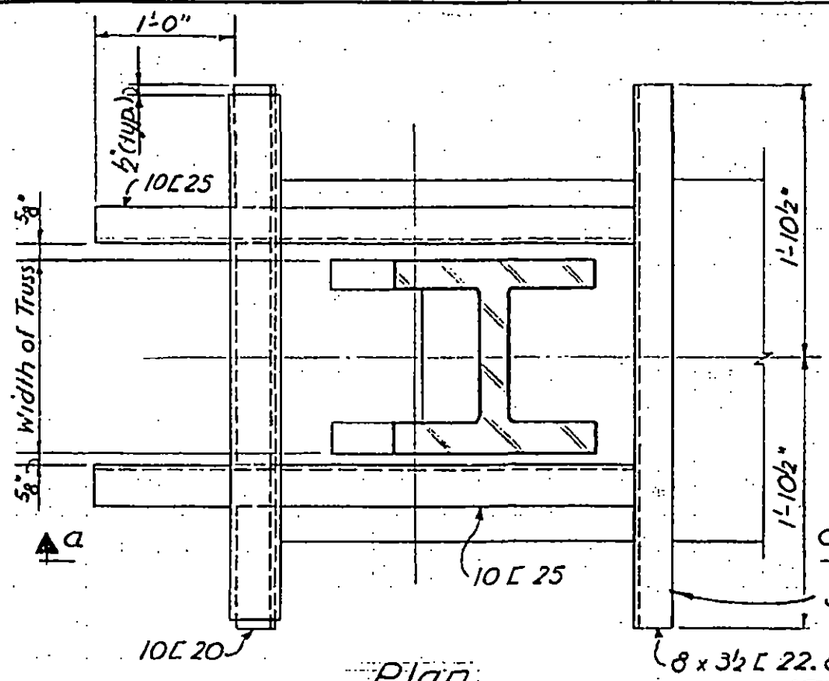

Plan

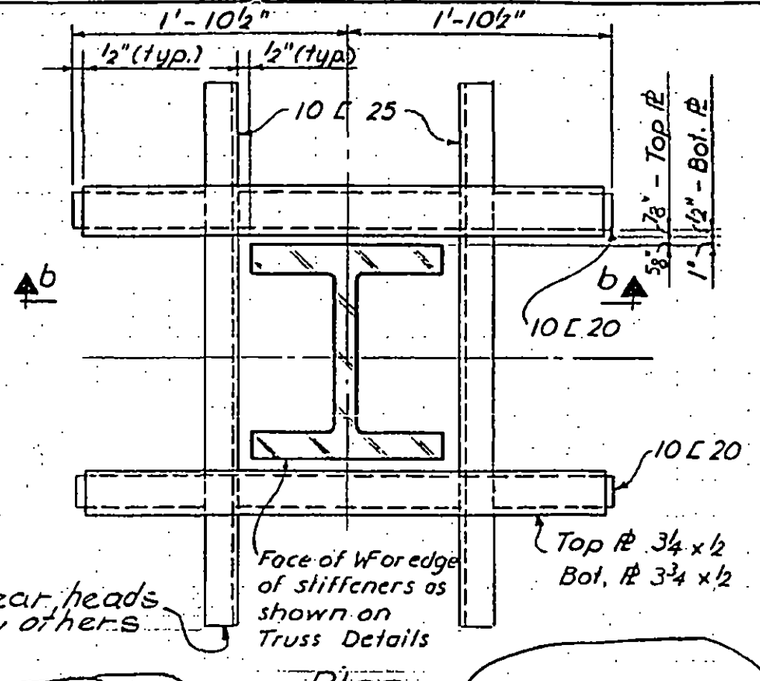

Plan

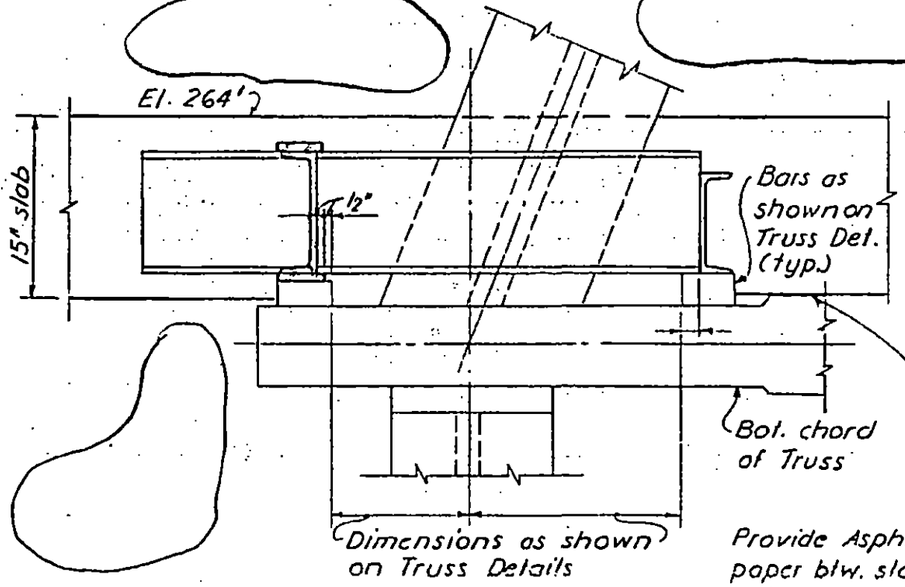

Section a-a
Detail 1

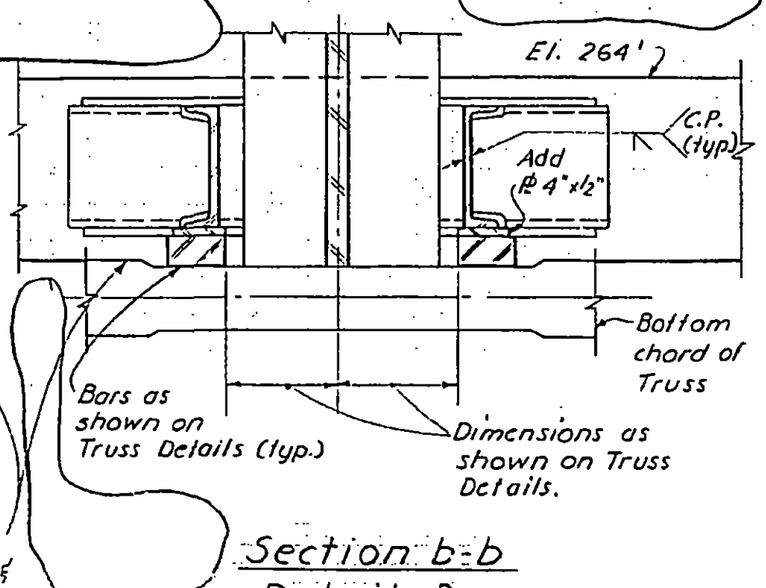

Section b-b
Detail 2

LICENSED PROFESSIONAL ENGINEER
LESLIE E. ROBERTSON
No. 34360
UNIVERSITY OF THE STATE OF NEW YORK

DRAWN S.C.

REVIEWED E.L.

8-JK5-11.3

SKILLING - HELLE - CHRISTIANSEN - ROBERTSON Structural & Civil Engineers

PROJECT THE WORLD TRADE CENTER | TITLE SHEAR HEAD DETAIL AT TRUSSES | DATE 5-1-68

REVISIONS

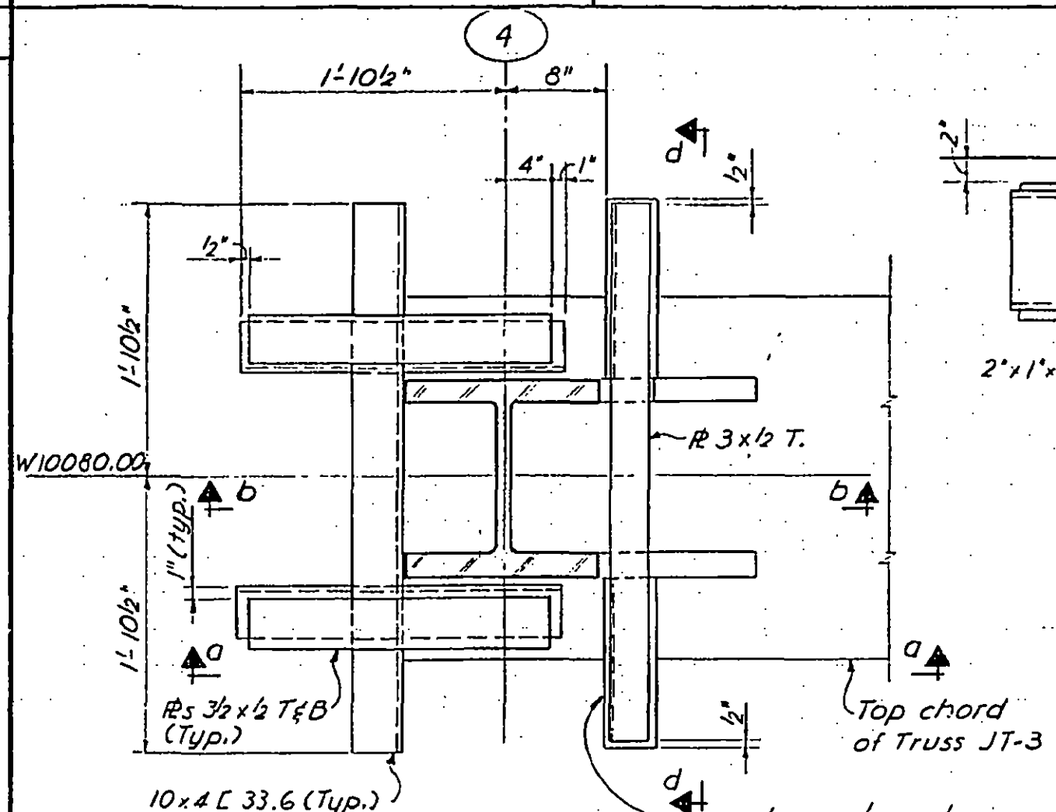

Plan

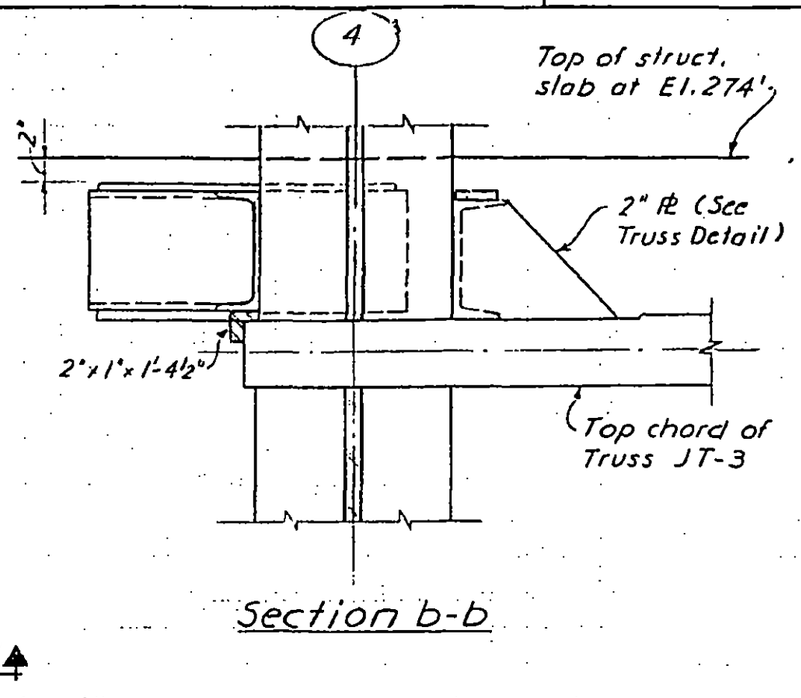

Section b-b

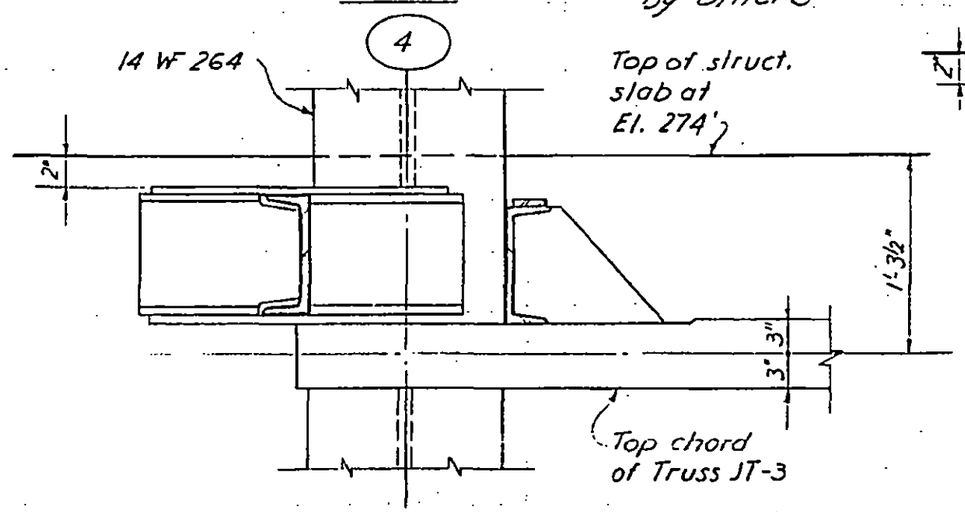

Section a-a

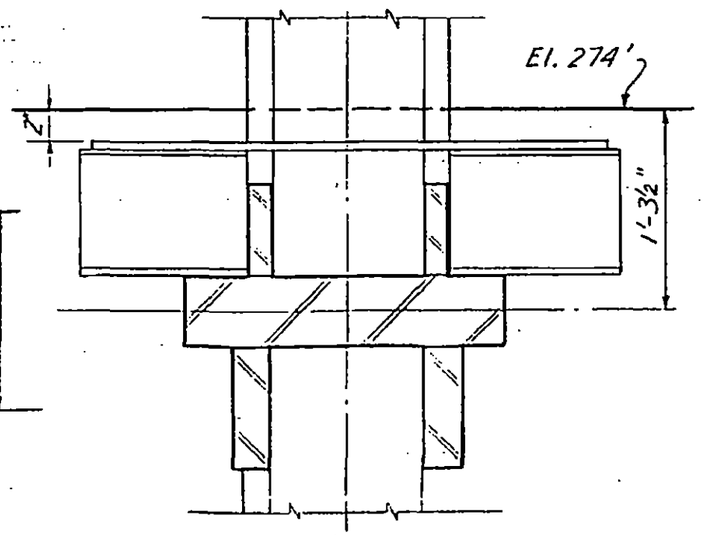

Section d-d

8-JK5-11.4

REGISTERED PROFESSIONAL ENGINEER
LESLIE E. ROBERTSON
No. 34360
UNIVERSITY OF THE STATE OF NEW YORK

SKILLING - HELLE - CHRISTIANSEN - ROBERTSON Structural & Civil Engineers

PROJECT THE WORLD TRADE CENTER | TITLE SHEAR HEAD DETAIL AT TRUSSES | DATE 5-1-68

REVISIONS

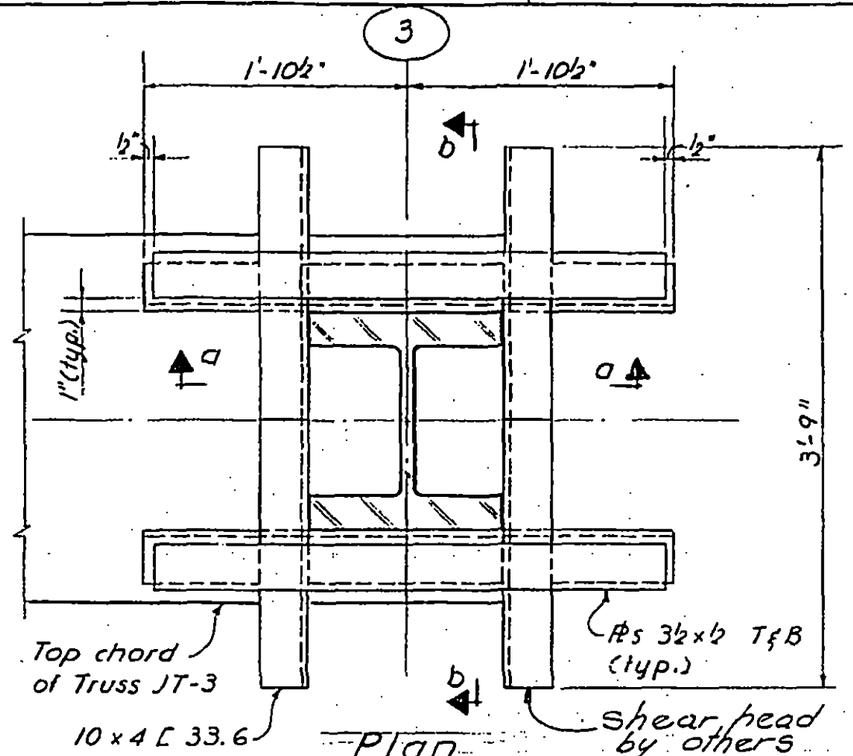

Plan

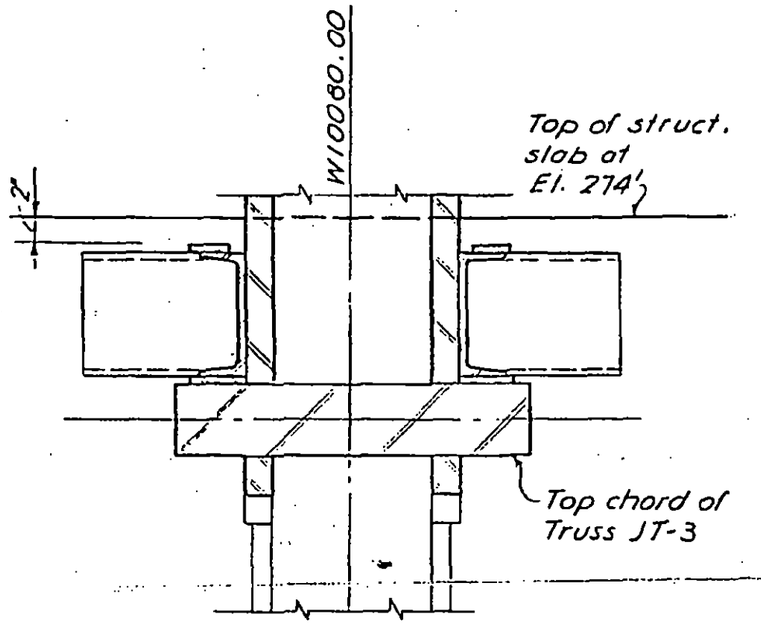

Section b-b

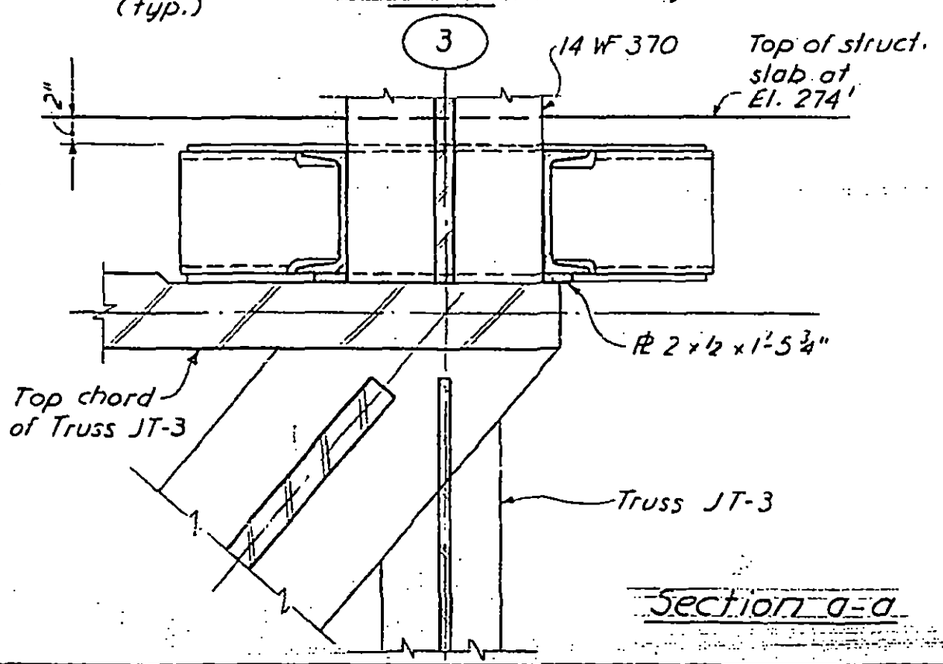

Section a-a

LICENSED PROFESSIONAL ENGINEER
LESLIE E. ROBERTSON
No. 34360
UNIVERSITY OF THE STATE OF NEW YORK

8-JK5-11.5

SKILLING - HELLE - CHRISTIANSEN - ROBERTSON Structural & Civil Engineers

PROJECT THE WORLD TRADE CENTER | TITLE TYPICAL DETAIL OF CONCRETE PROTECTIVE SLAB | DATE 5-1-68

REVISIONS

10-21-68

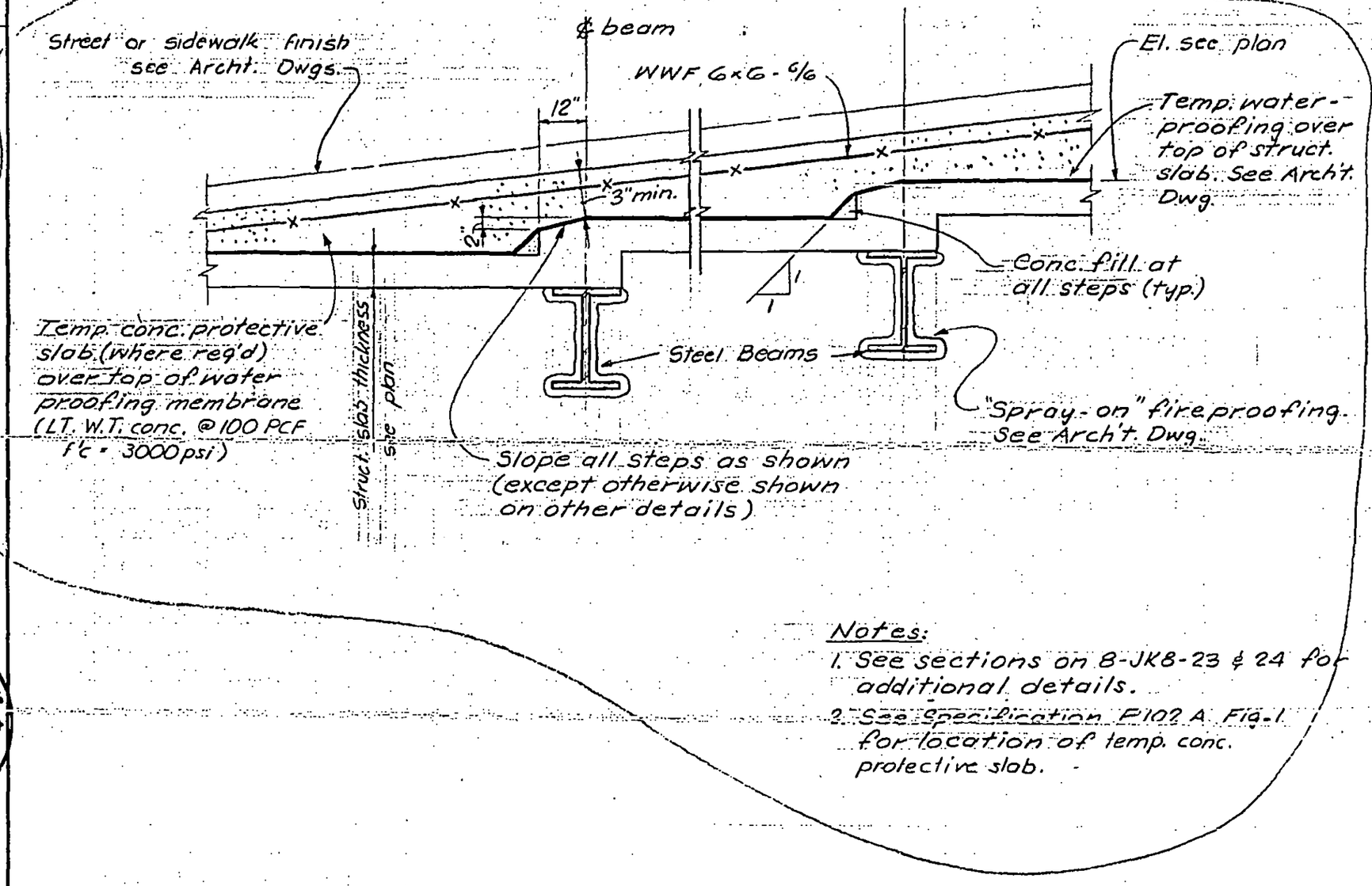

Notes:

1. See sections on 8-JK8-23 & 24 for additional details.
2. See Specification F102 A Fig-1 for location of temp. conc. protective slab.

LICENSED PROFESSIONAL ENGINEER
LESLIE E. ROBERTSON
No. 34360
UNIVERSITY OF THE STATE OF NEW YORK

8 JK5 12

SKILLING - HELLE - CHRISTIANSEN - ROBERTSON Structural & Civil Engineers

PROJECT THE WORLD TRADE CENTER | TITLE COLUMN BASE PL. DETAIL AT TRUCK RAMPS. | DATE 5-1-68

REVISIONS

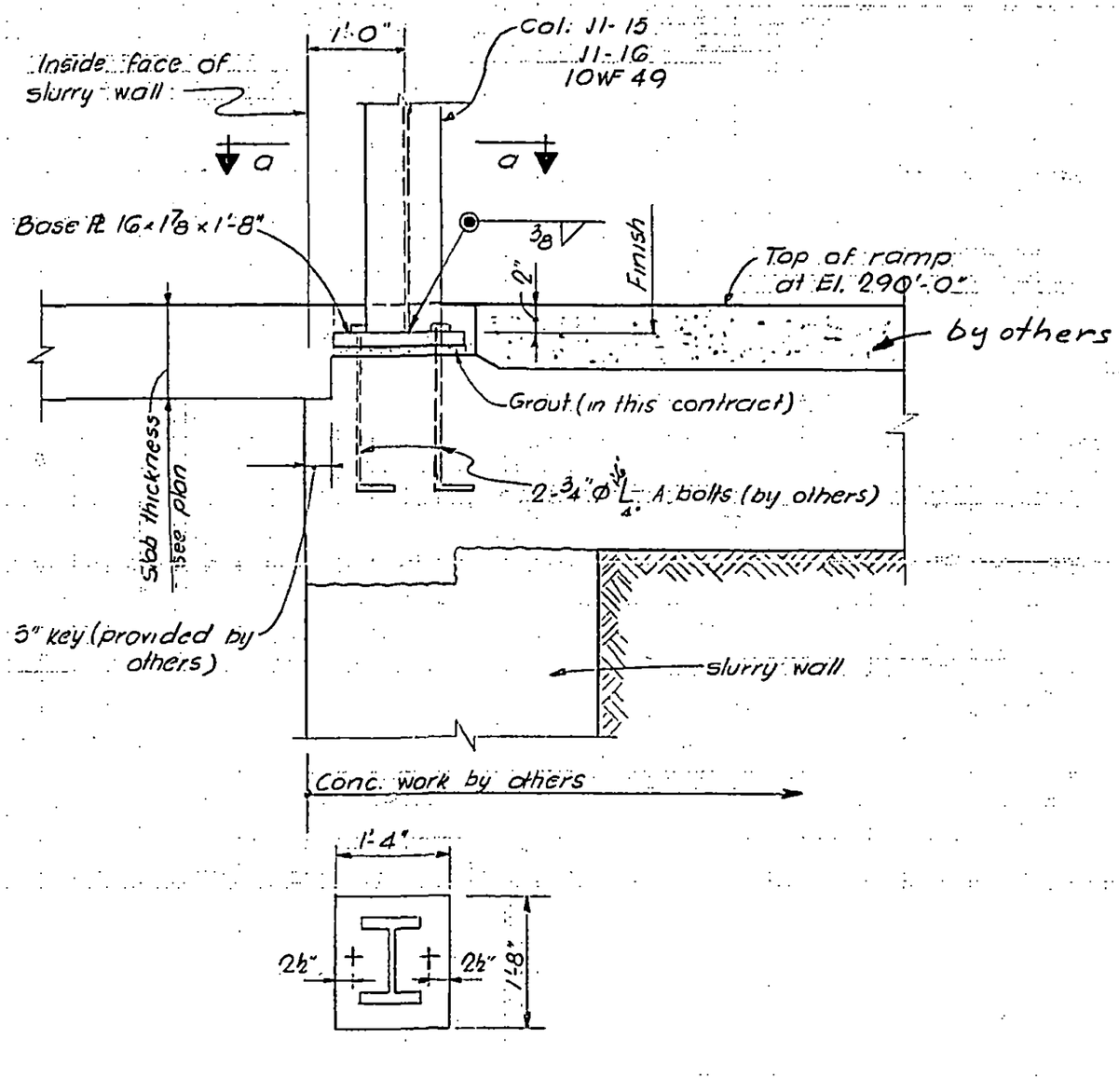

Section a-a

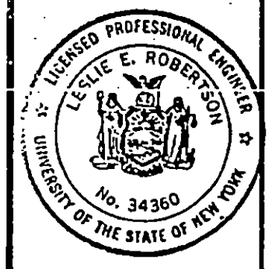

8-JK5-15

SKILLING - HELLE - CHRISTIANSEN - ROBERTSON Structural & Civil Engineers

PROJECT THE WORLD TRADE CENTER | TITLE TEMPORARY EXPANSION JOINT - TYPE A | DATE 5-1-68

REVISIONS
12-18-68
2-27-69
3-25-69
4-2-69
5-21-69

Fill with Two-component Gelled epoxy bonding matl. (Colma-Dur Gel, manufactured by Sika Chem. Co., is considered as approved bonding component) when directed by the Engineer.

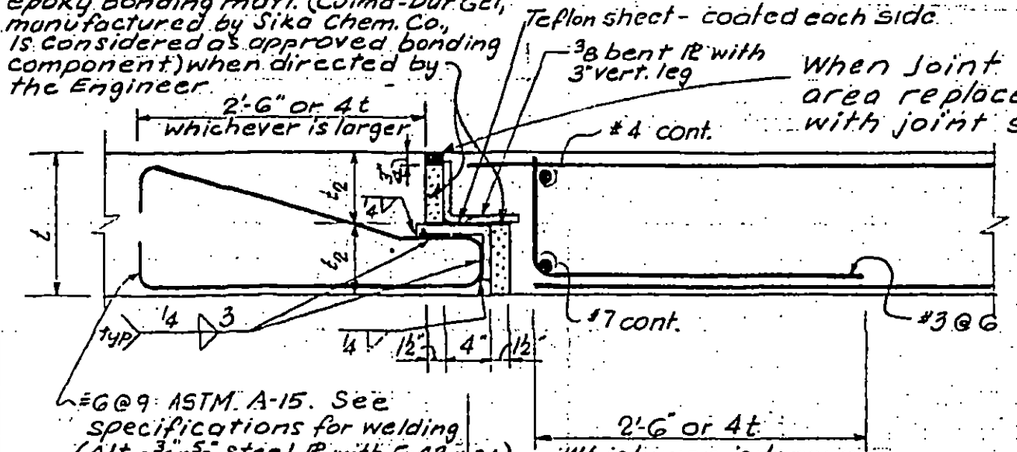

Anchors shown are symmetrical about ℄ | Reinf. shown is symmetrical about ℄

See Plans for Expansion Joint layout.
See 8-JK5-14.4 thru 14.6 for alternate det.

Notes:
1. Joints shall not be closed unless:
   a) All floors directly above are closed and the temperature control is properly maintained within the range as shown on the Mech. Dwg. SK-M-40 thru 45 (By JBB 8-23-68).
   b) As directed by the Engineer.

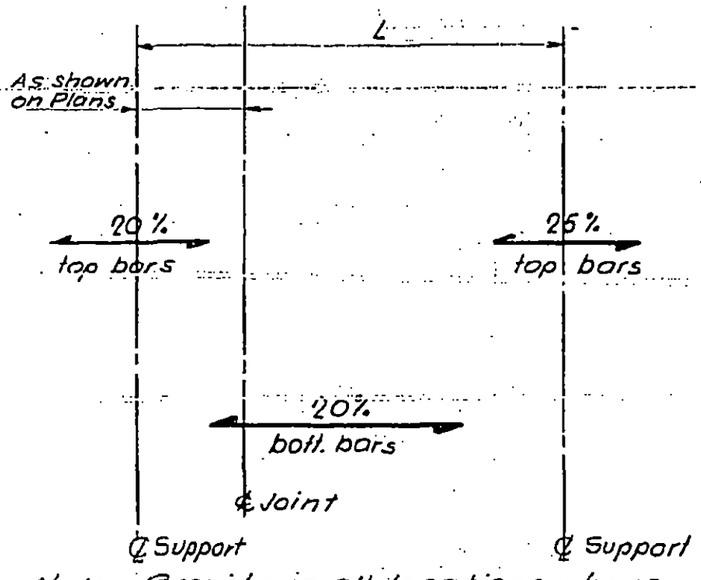

Note: Provide in all locations where directed by the engineer

TYPICAL ADDED REINFORCING AT ONE-WAY SLABS

Note: Provide in all locations where directed by the engineer

TYPICAL ADDED REINFORCING AT FLAT SLABS

8-JK5-14.1

LICENSED PROFESSIONAL ENGINEER LESLIE E ROBERTSON No. 34360 UNIVERSITY OF THE STATE OF NEW YORK

DRAWN S.C.
REVIEWED I.M. & F.I.

SKILLING - HELLE - CHRISTIANSEN - ROBERTSON Structural & Civil Engineers

PROJECT THE WORLD TRADE CENTER | TITLE TEMPORARY EXPANSION JOINT - TYPE B | DATE 5-1-68

REVISIONS

2-27-69

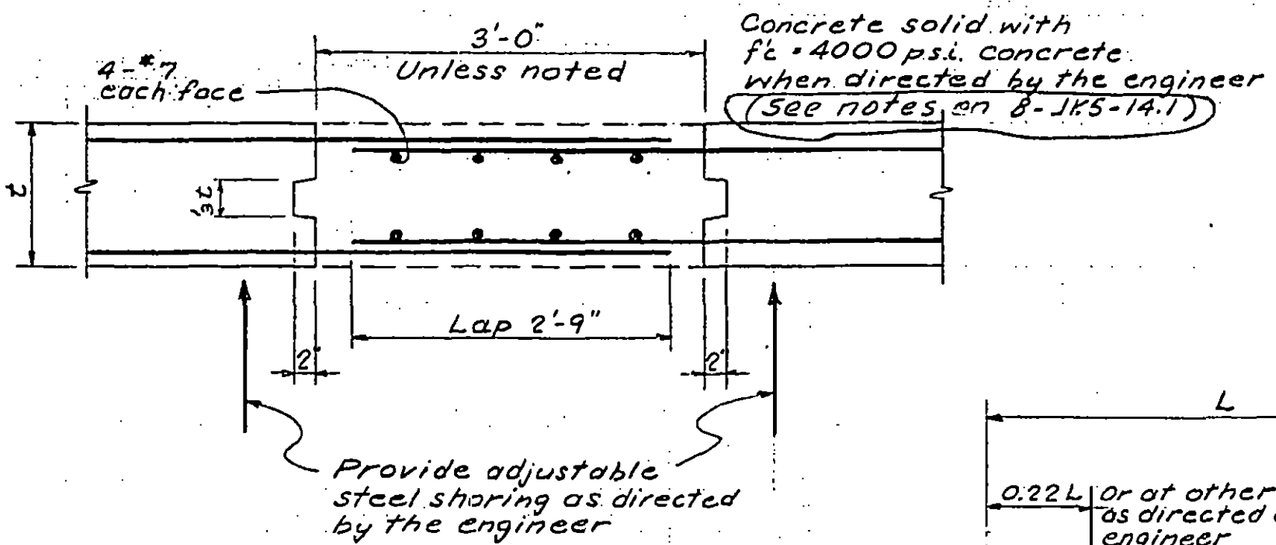

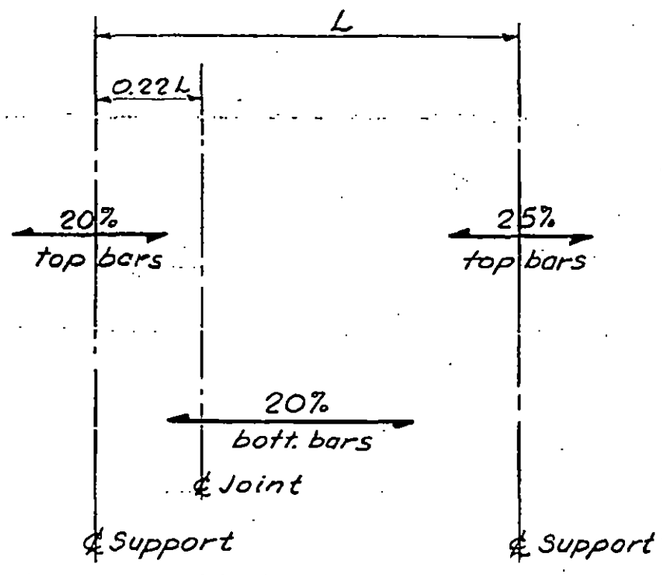

Note: Provide in all locations where directed by the engineer.

TYPICAL ADDED REINFORCING AT ONE-WAY SLABS

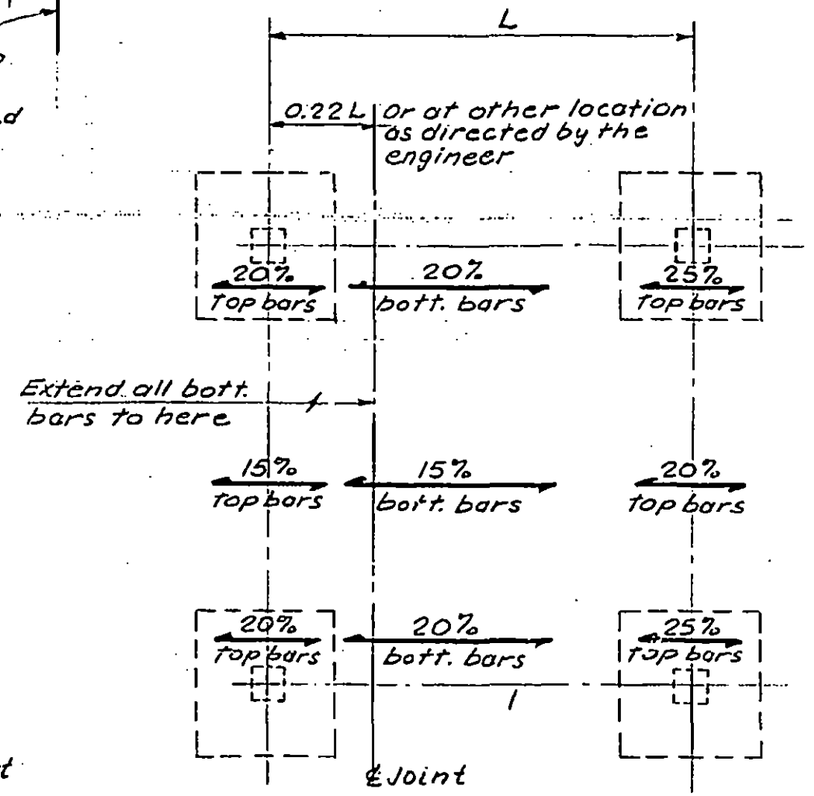

Note: Provide in all locations where directed by the engineer.

TYPICAL ADDED REINFORCING AT FLAT SLABS

LICENSED PROFESSIONAL ENGINEER
LESLIE E. ROBERTSON
No. 36360
UNITED STATE OF NEW YORK

8-JK5-14.2

SKILLING, HELLE, CHRISTIANSEN, ROBERTSON — Structural & Civil Engineers

PROJECT: THE WORLD TRADE CENTER | TITLE: TEMPORARY CONSTRUCTION JOINT DETAIL | DATE: 2-27-69

REVISIONS

6-13-69 GEN. REV.

Where heavy loads are liable to occur during construction period, protect this portion of slab by providing timber planks & sleepers. Sleepers shall be placed directly over the top of steel beams in order to avoid accidental load on slab

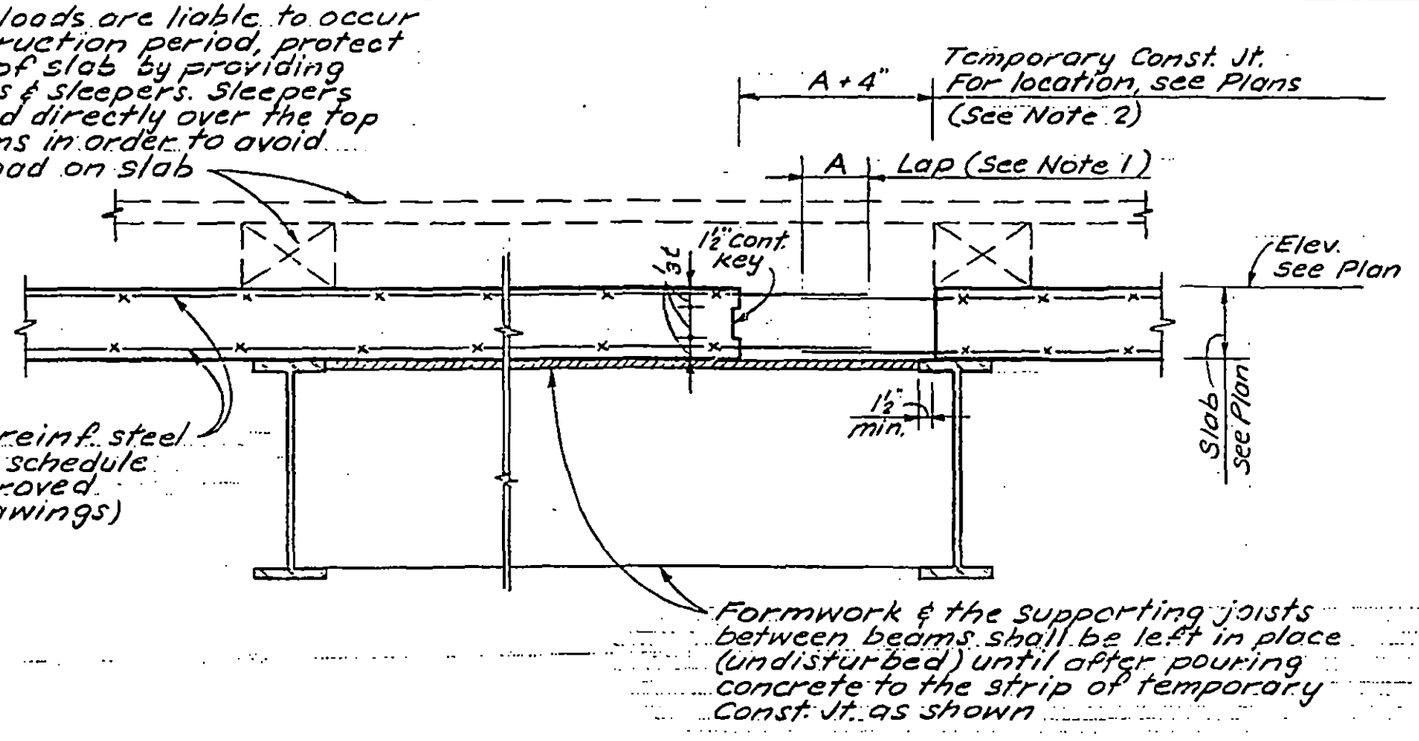

Notes:

1. Provide lap splice for all reinf. to allow temperature movements and the lap shall be:
   a. For WWF, the overlap distance between outermost cross wires of each fabric sheet shall not be less than the spacing of the cross wires plus 2".
   b. For reinf. bars, the lap shall not be less than 36 bar diameters.
2. All joints shall not be closed unless:
   a. All floors directly above have been constructed, enclosure walls built, and the temperature control is properly maintained within the range as shown on Mech. Dwg. SK-M-40 thru 45 (by JBB, 8-23-68)
   b. As directed by the Engineer.

LICENSED PROFESSIONAL ENGINEER — LESLIE E. ROBERTSON — No. 34360 — UNIVERSITY OF THE STATE OF NEW YORK

DESIGNED

DRAWN S.C.

REVIEWED E.L.

8-JKS-14.3

SKILLING, HELLE, CHRISTIANSEN, ROBERTSON — Structural & Civil Engineers

PROJECT: THE WORLD TRADE CENTER | TITLE: TEMPORARY EXPANSION JOINT—TYPE A (ALTERNATE) | DATE: 4-2-69

REVISIONS

4-21-69

Fill with two-component Gelled Epoxy Bonding Material (Colmo-Dor Gel, manufactured by Sika Chem Co is considered as approved bonding component) when directed by the Engineer

When joint occurs in parking garage area, replace the top 3/4" of Epoxy with joint sealant.

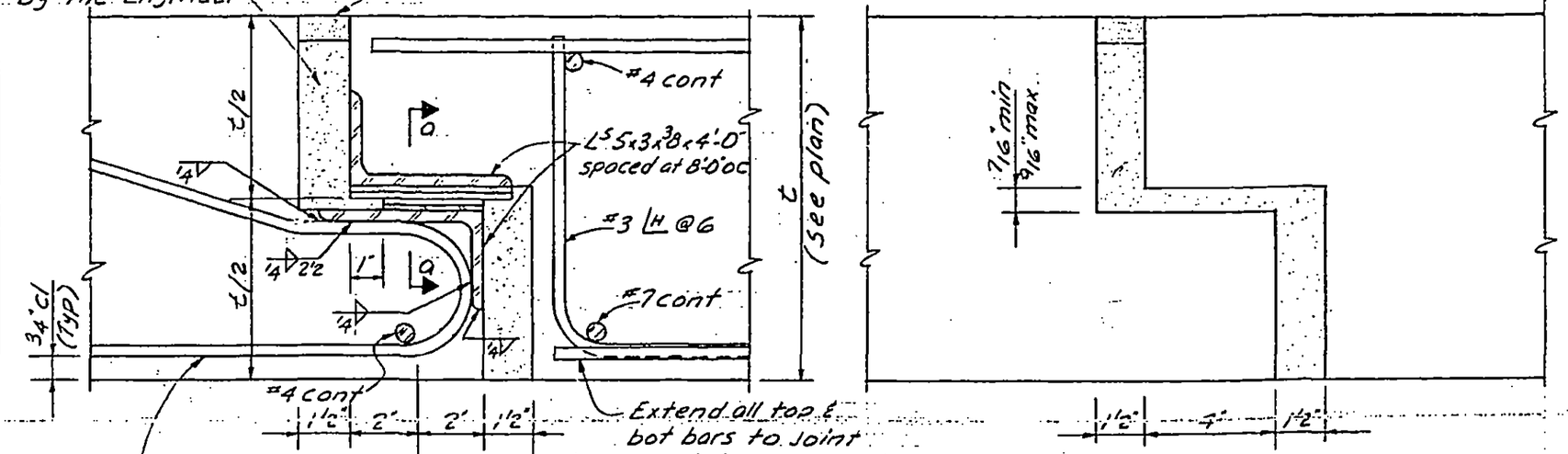

SECTION BTW SLIDE BRG ASSEMBLY

SECTION THRU SLIDE BEARING ASSEMBLY

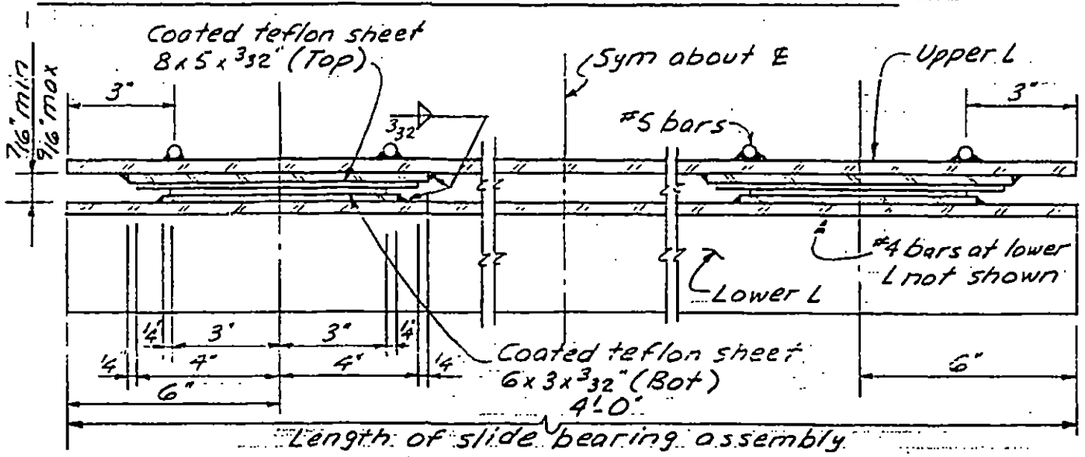

Section a-a

Notes:

1. H = 2'-6" or 4t whichever is larger.
2. See notes and added reinf in slab on 8-JK5-14.1
3. "Slide bearing assembly" sets are spaced at 8'-0" oc along the length of temporary exp jt as shown on plans.

LICENSED PROFESSIONAL ENGINEER — LESLIE E. ROBERTSON — No. 34360 — UNIVERSITY OF THE STATE OF NEW YORK

DESIGNED

DRAWN: A.L. FRANQUI

REVIEWED: E.L

8-JK5-14.4

SKILLING, HELLE, CHRISTIANSEN, ROBERTSON — Structural & Civil Engineers

PROJECT THE WORLD TRADE CENTER | TITLE TEMPORARY EXPANSION JOINT DETAIL | DATE 5-14-69

REVISIONS

5-21-69

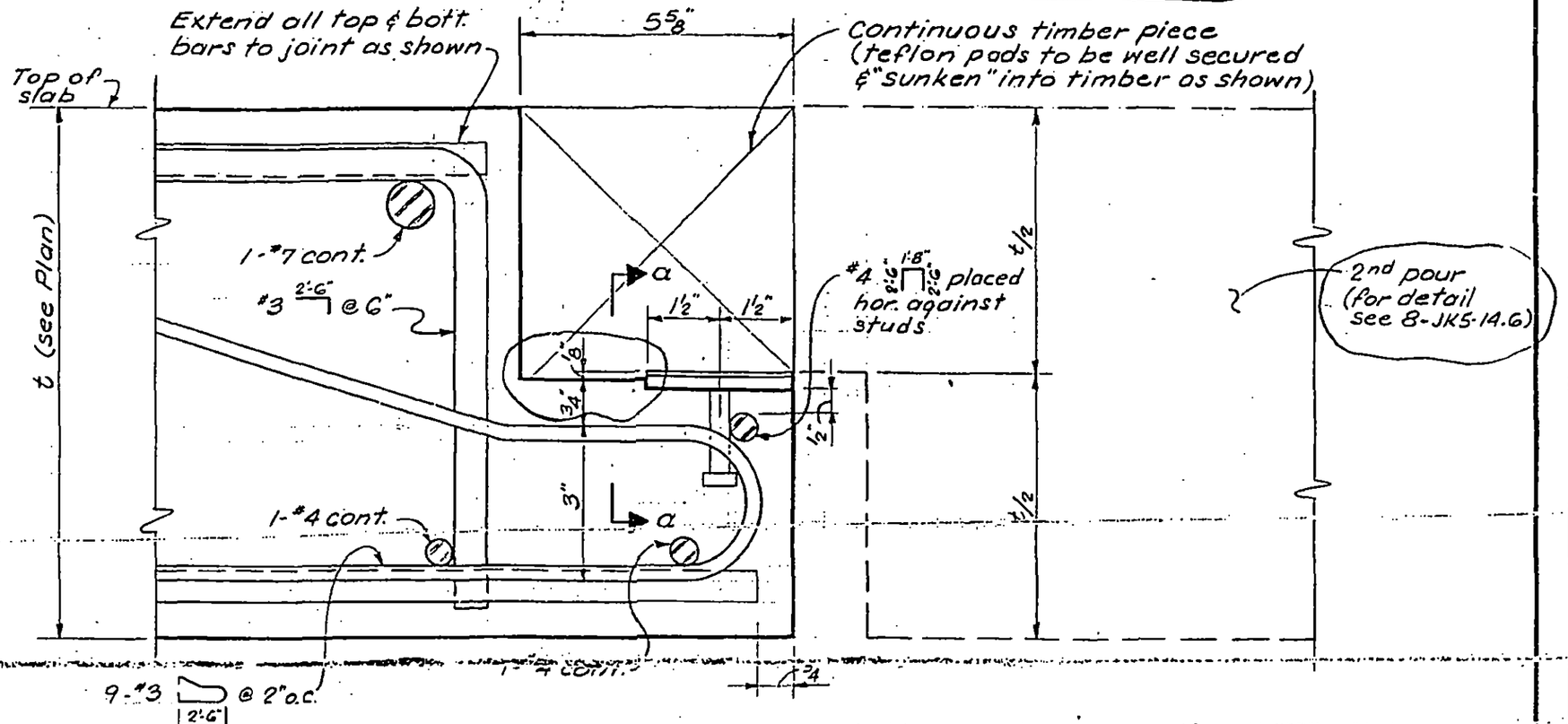

Elevation Of Lower Tongue (1st Pour)

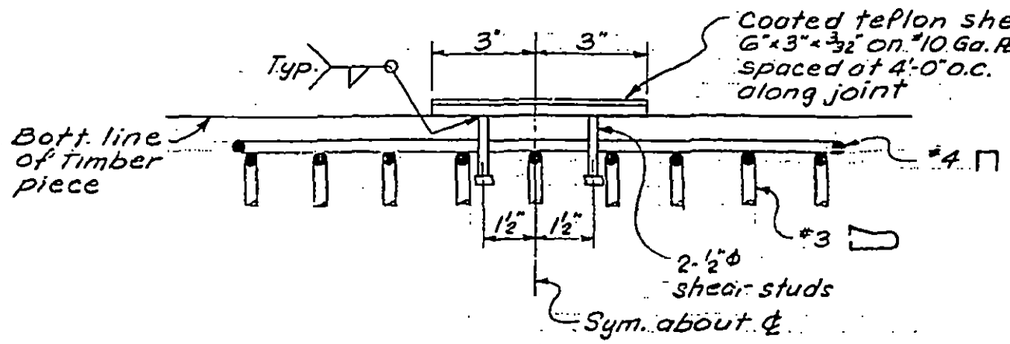

Section a-a

Notes:

1. See notes and added reinf. in slab on 8-JK5-14.1

LICENSED PROFESSIONAL ENGINEER — LESLIE E. ROBERTSON — No. 34360 — UNIVERSITY OF THE STATE OF NEW YORK

DESIGNED

DRAWN S.C.

REVIEWED E.L

8-JK5-14.5

SKILLING, HELLE, CHRISTIANSEN, ROBERTSON — Structural & Civil Engineers

PROJECT: THE WORLD TRADE CENTER | TITLE: TEMPORARY EXPANSION JOINT DETAIL | DATE: 5-21-69

REVISIONS

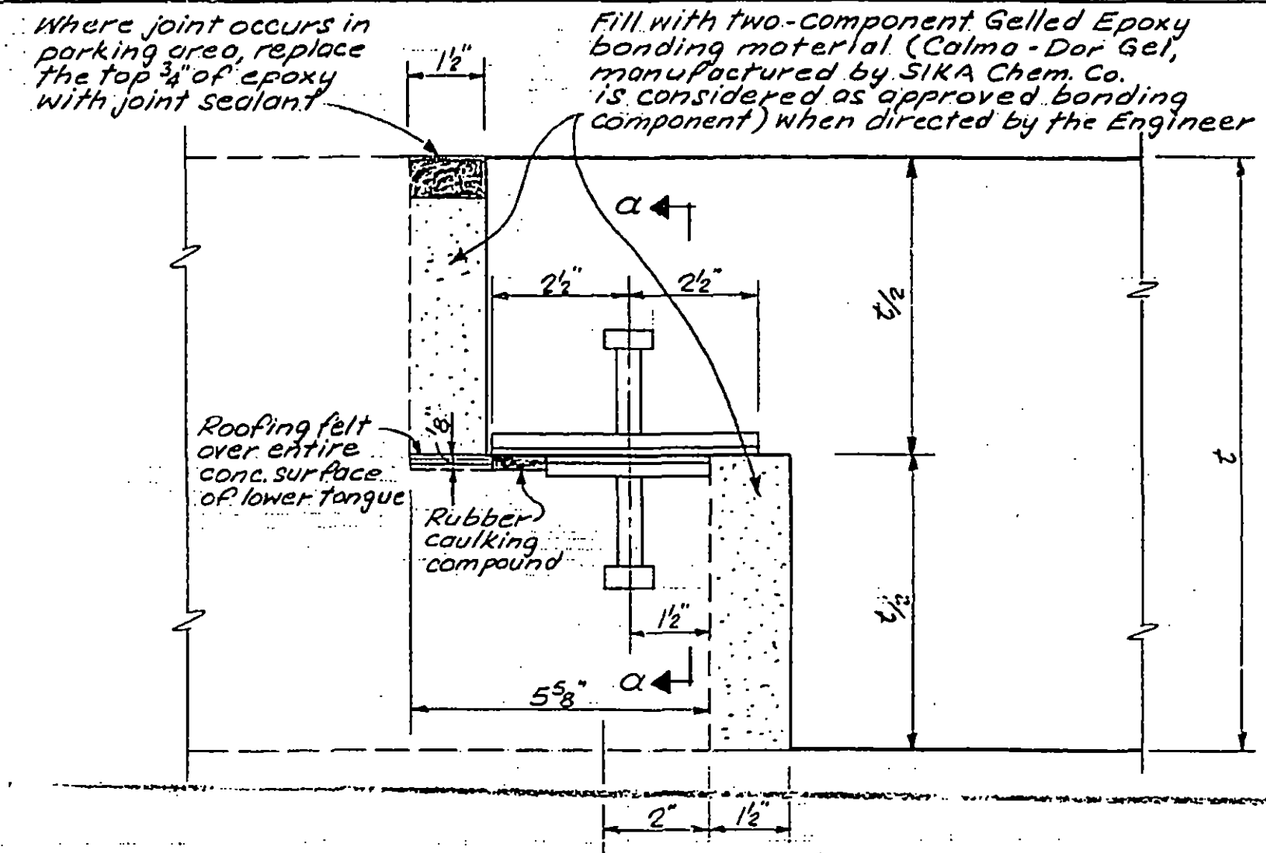

Lower tongue see 8-JK5-14.5 — ℄ — Reinf. in upper tongue similar (opp. hand) to reinf. in lower tongue as shown on 8-JK5-14.5

Elevation of Upper Tongue (2nd Pour)

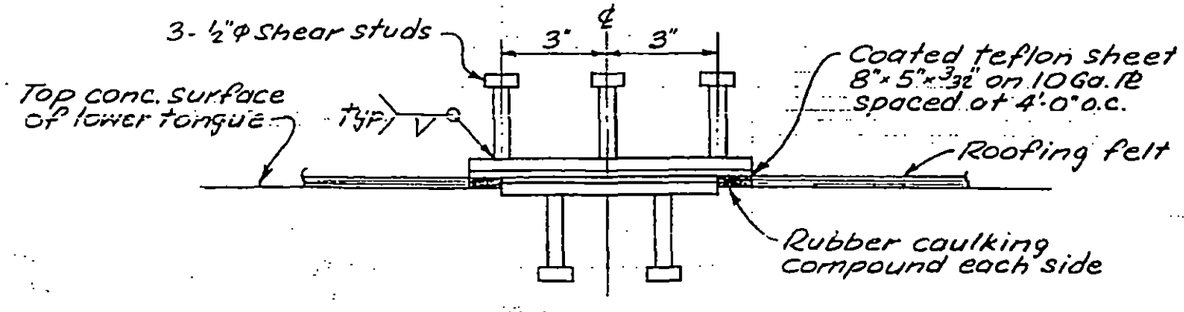

Notes:
1. See notes and added reinf. in slab on 8-JK5-14.1

Section a-a

LICENSED PROFESSIONAL ENGINEER — LESLIE E. ROBERTSON — No. 34360 — UNIVERSITY OF THE STATE OF NEW YORK

DESIGNED

DRAWN: S.C.

REVIEWED: E.L.

8-JK5-14.6

SKILLING, HELLE, CHRISTIANSEN, ROBERTSON — Structural & Civil Engineers

PROJECT THE WORLD TRADE CENTER | TITLE TEMPORARY EXPANSION JOINT DETAIL | DATE 1-16-70

REVISIONS

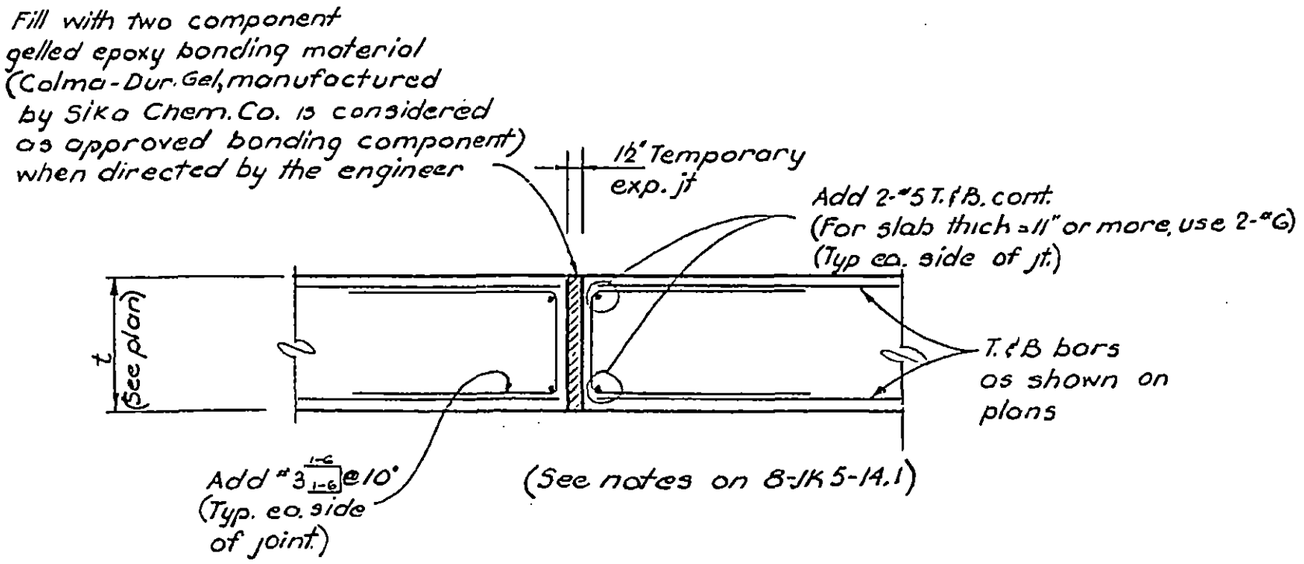

LICENSED PROFESSIONAL ENGINEER — LESLIE E. ROBERTSON — No. 34360 — UNIVERSITY OF THE STATE OF NEW YORK

DESIGNED

DRAWN D. C. Huggins

REVIEWED E.L.

8-JK 5-14.7

SKILLING, HELLE, CHRISTIANSEN, ROBERTSON — Structural & Civil Engineers

PROJECT: THE WORLD TRADE CENTER | TITLE: TEMPORARY EXPANSION JOINT - TYPE BX | DATE: 2-24-72

REVISIONS

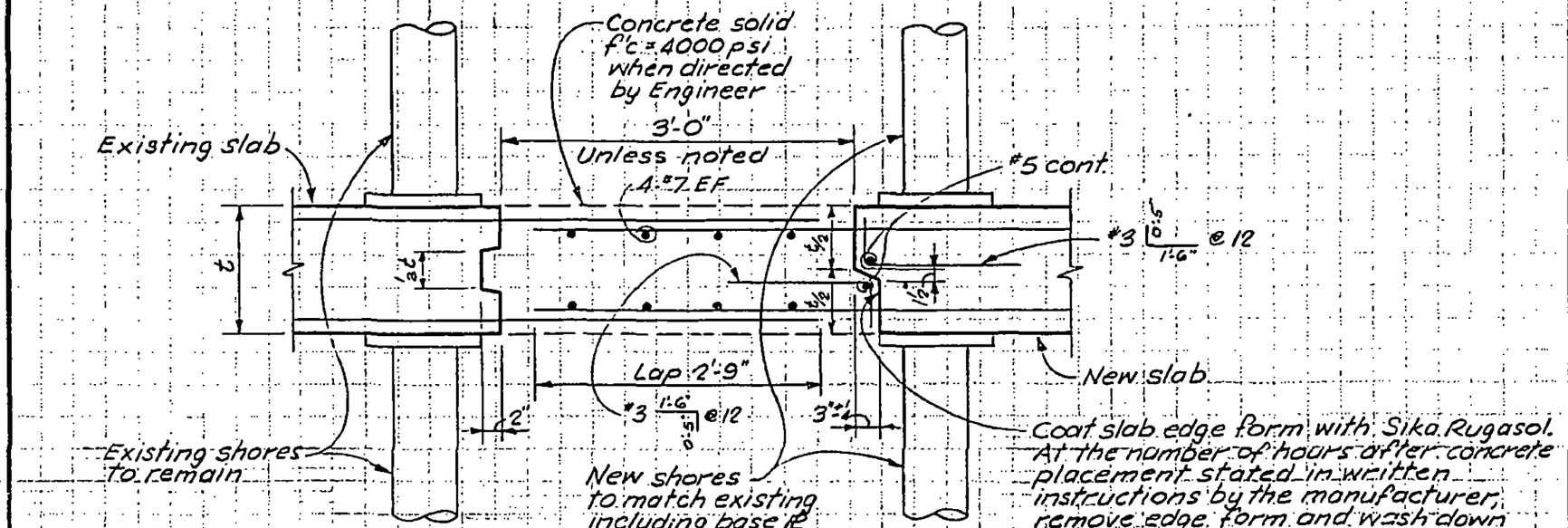

LICENSED PROFESSIONAL ENGINEER — LESLIE E. ROBERTSON — No. 34360 — UNIVERSITY OF THE STATE OF NEW YORK

DESIGNED

DRAWN: SC

REVIEWED

8-JK5-14.8

SKILLING, HELLE, CHRISTIANSEN, ROBERTSON — Structural & Civil Engineers

PROJECT THE WORLD TRADE CENTER | TITLE TYPICAL DETAIL OF 3" PROTECTION SLAB AT EL. 310 | DATE 8-23-68

REVISIONS

10-21-68

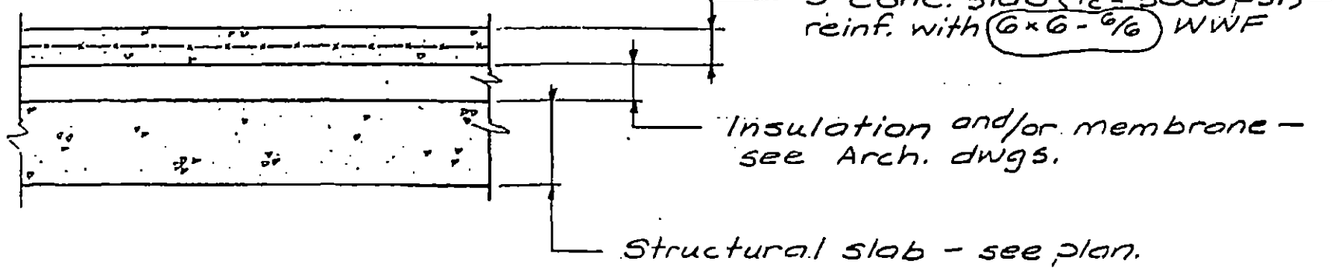

Note:

For location of surface slab see Spec. (pg. 102A, fig. 1) & 8-JK5-16.

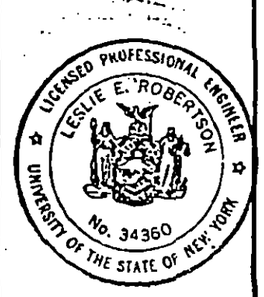

DESIGNED

DRAWN

REVIEWED

8-JK5-15

SKILLING, HELLE, CHRISTIANSEN, ROBERTSON — Structural & Civil Engineers

PROJECT: THE WORLD TRADE CENTER | TITLE: LOCATION OF WORK PLATFORMS AT EL. 310' | DATE: 10-21-68

REVISIONS

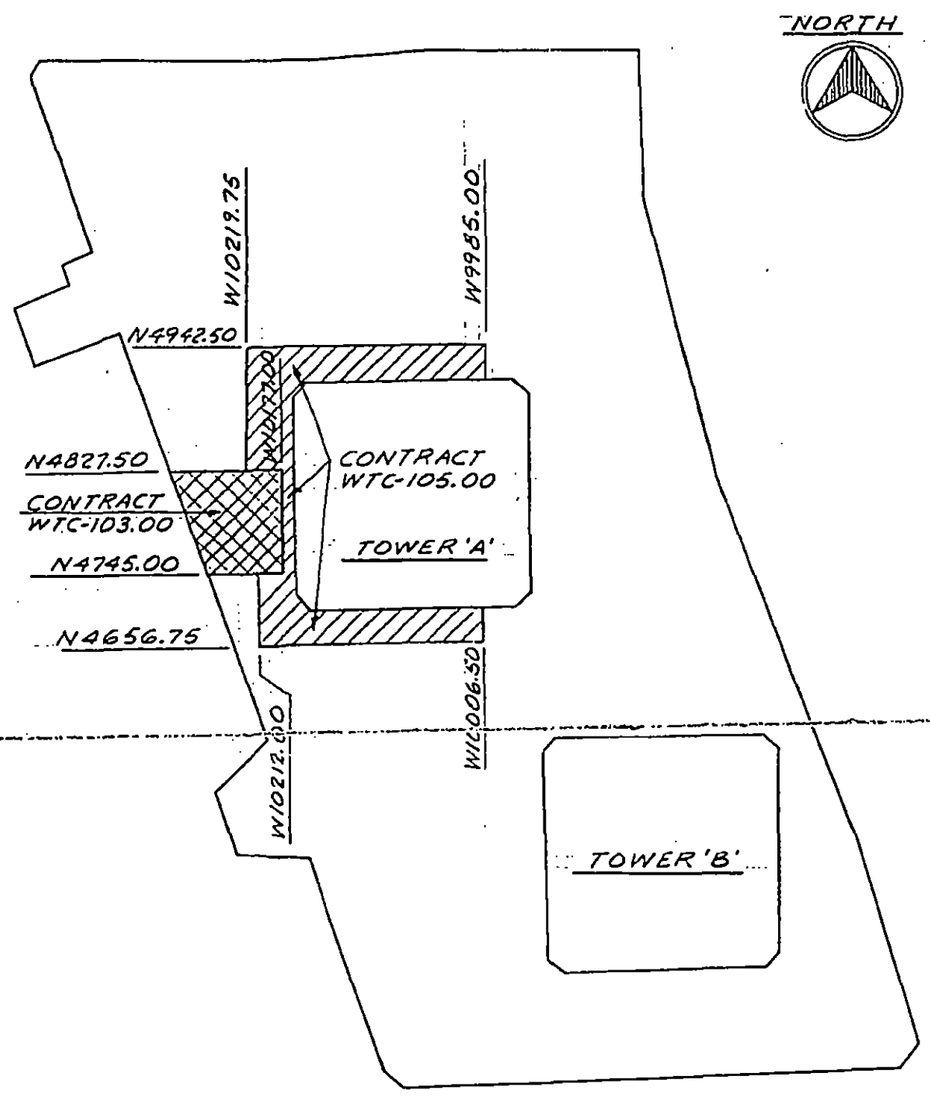

LICENSED PROFESSIONAL ENGINEER
LESLIE E. ROBERTSON
No. 34360
UNIVERSITY OF THE STATE OF NEW YORK

DESIGNED

DRAWN

REVIEWED

8-JK5-16

SKILLING, HELLE, CHRISTIANSEN, ROBERTSON — Structural & Civil Engineers

PROJECT: THE WORLD TRADE CENTER | TITLE: CONCRETE MIX DIVISION LINES — SLAB AT EL. 310 | DATE: 10-21-68

REVISIONS

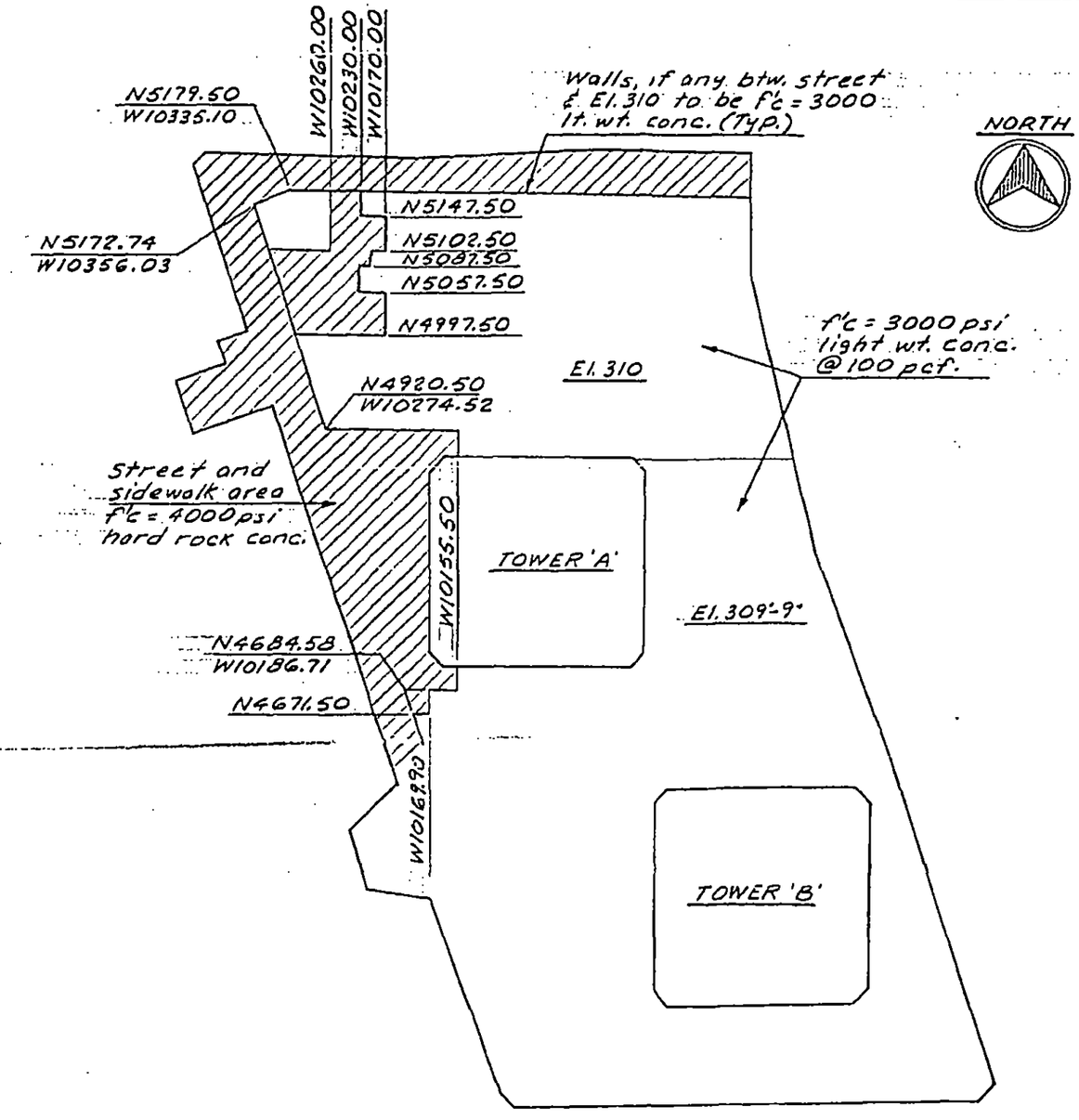

LICENSED PROFESSIONAL ENGINEER — LESLIE E. ROBERTSON — No. 34360 — UNIVERSITY OF THE STATE OF NEW YORK

DESIGNED

DRAWN

REVIEWED

8-JK5-17

WORTHINGTON, SKILLING, HELLE & JACKSON — Civil & Structural Engineers

PROJECT THE WORLD TRADE CENTER | TITLE TYPICAL CONCRETE BEAM DETAILS | DATE 5-1-68

REVISIONS

12-18-68

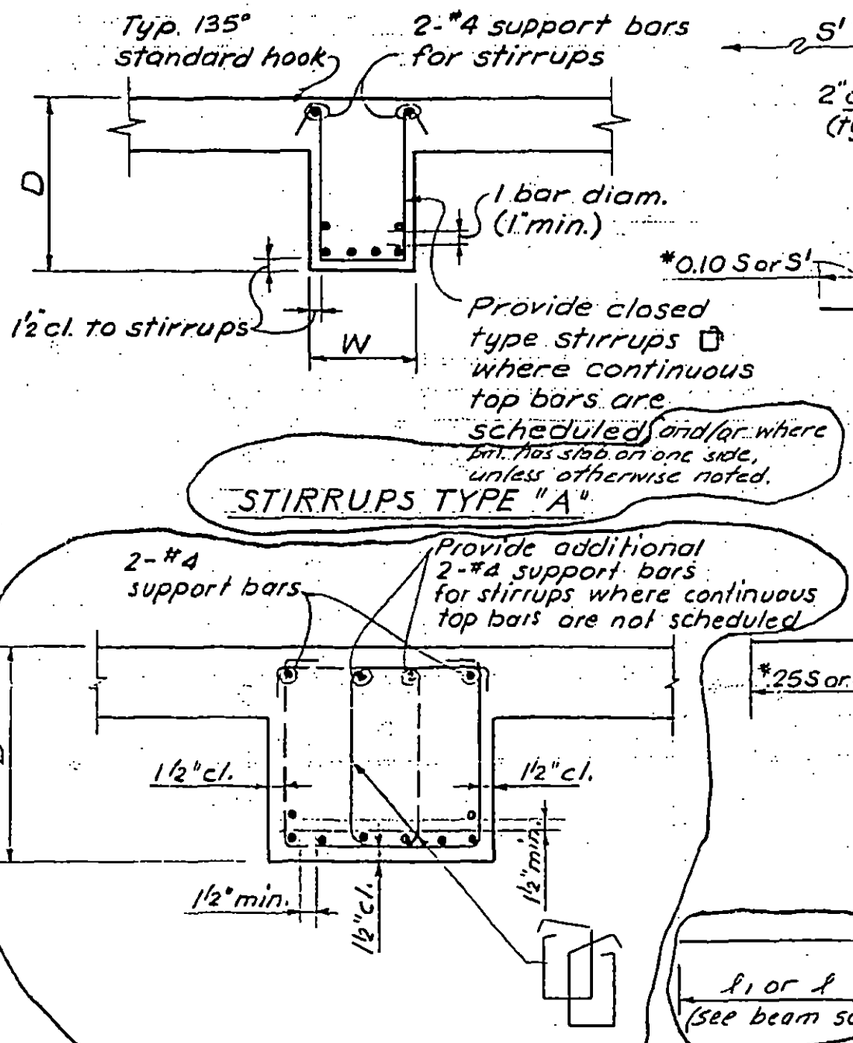

STIRRUPS TYPE "A"

STIRRUPS TYPE "B"

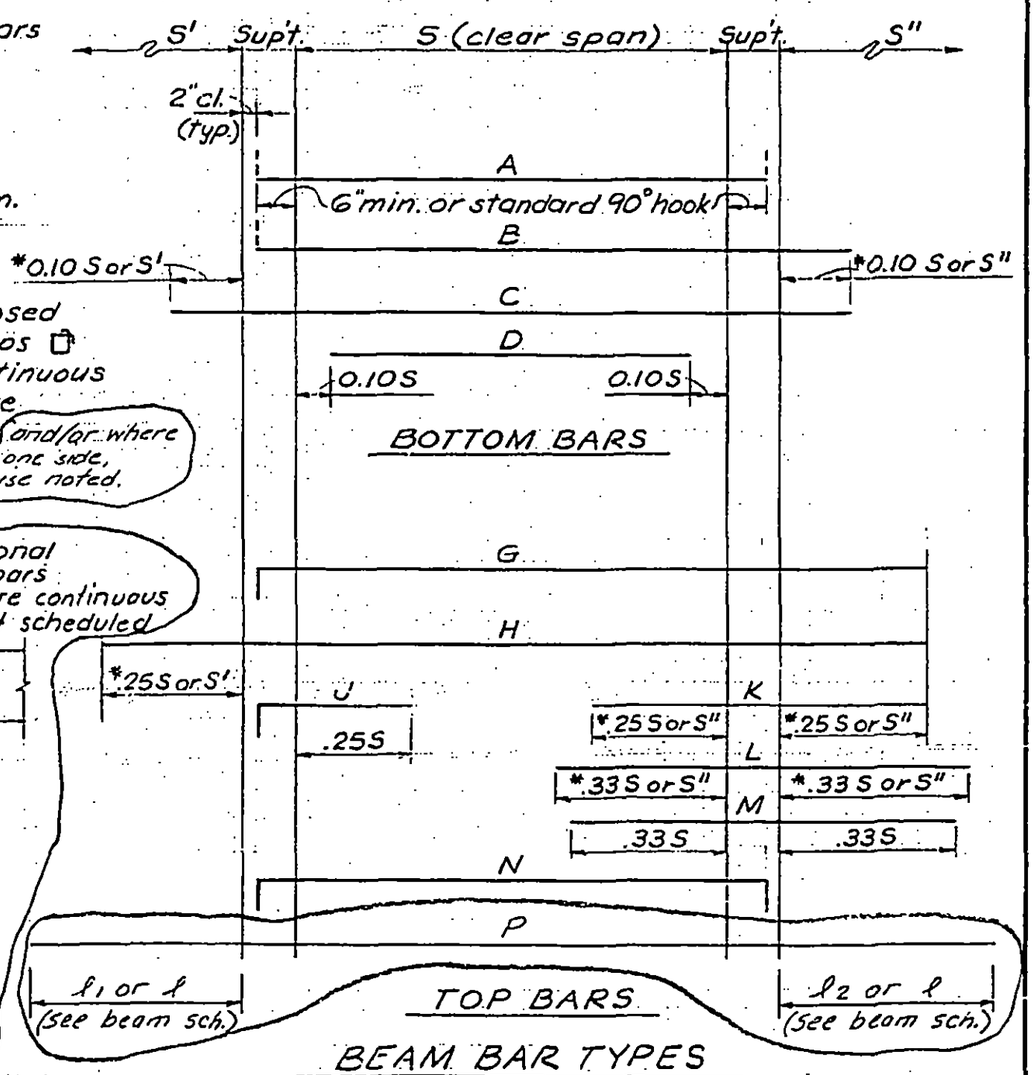

BEAM BAR TYPES

* Whichever span is larger

Notes:

1. First stirrup at distance $(\frac{d}{2})$ from support face, (d) being the first stirrup spacing given in schedule.
2. All beams to have reinf. conform to ASTM A-432 unless otherwise shown on sections or details.

Notes (cont.)

3. All stirrups shall conform to ASTM A-15 unless otherwise shown on schedules or details.

LICENSED PROFESSIONAL ENGINEER — LESLIE E. ROBERTSON — No. 34360 — UNIVERSITY OF THE STATE OF NEW YORK

DRAWN S.C.

REVIEWED J.M. & E.L.

8-JK5-21

WORTHINGTON, SKILLING, HELLE & JACKSON — Civil & Structural Engineers

PROJECT THE WORLD TRADE CENTER | TITLE CONCRETE BEAM SCHEDULE | DATE 7-9-68

REVISIONS

3-16-70 GEN. REV.

6-25-70

NORTH PROJECTION

MK	CONCRETE SECTION W	CONCRETE SECTION D	BOTTOM BARS No.	BOTTOM BARS Size	BOTTOM BARS Type	TOP BARS No.	TOP BARS Size	TOP BARS Type	TOP BARS Location	STIRRUPS Size	STIRRUPS Type	STIRRUPS Spacing each end	REMARKS
NB1	24	27	4	7	A	2	8	G		3		L.1@6; bal.@14 R.1@4½; 6@9	
NB2	24	27	6	7	A	2 2	8 8	K G	Left	3		L.1@3; 8@6; bal.@12 R.1@6	
NB3	24	27	6	6	A	2	7	G		3		1@6; bal. @12	
NB4	24	27	6	6	A	2 2	7 7	K G	Left	3		1@6; bal. @12	
NB5	24	27	5	7	A	4 5	6 8	J L	Left Right	3		1@6; bal. @12	
NB6	24	27	4	7	A	5	8	L	Right	3		1@6; bal. @12	
NB7	20	27	5	7	A	4	6	J	Right	3		L.1@4; 6@8; bal.@12 R.1@6	
NB8	24	27	4	8	A	4 6	6 8	J L	Left Right	3		L.1@6; bal.@12 R.1@4; 4@8	
NB9	24	27	4	8	A	6	8	K	Right	3		1@4½; 4@9; bal.@12	
NB10	19½	27	4	8	A	2 4	8 6	K J	Left Right	3		L.1@3; 6@6; bal.@12 R.1@6	
NB11	24	27	3 2	8 7	A A	4 6	6 8	J L	Left Right	3		L.1@6; bal.@12 R.1@4; 6@8	
NB12	24	27	4	8	A	6	8	L	Right	3		1@4; 4@8; bal.@12	
NB13	24	27	3 2	8 7	A A	4 4	7 6	L J	Left Right	3		L.1@4; 6@8; bal.@12 R.1@6	
NB14	24	27	6	8	A	4 8	5 8	J L	Left Right	3		L.1@6; bal.@12 R.1@2; 10@4; 6@6	
NB15	24	27	4	8	A	—	—	—		3		1@4½; 4@9; bal.@12	
NB16	24	27	6	8	A	8 4	8 6	L J	Left Right	3		L.1@3; 9@6; bal.@12 R.1@6	
NB17	24	27	6	8	A	4 6	6 8	J L	Left Right	3		L.1@6; bal.@12 R.1@8; 10@6	
NB18	24	27	2 4	8 7	A A	4	6	J	Right	3		L.1@3; 10@6; bal.@12 R.1@6	
NB19	24	27	6	7	A	5 2	6 8	J L	Exterior Support Interior Support	3		1@3; bal.@12 R.1@8; 10@6	
NB20	24	27	7	7	A	4	5	J	Exterior Support	3		L.1@4½; 10@5; 3@9; bal.@12 R.1@6	
NB21	24	30	Top & Bott. Steel From NB22							3		1@4½; bal.@9	Cantilever
NB22	24	30	4	8	C	5	7	H		3		L.1@4½; 14@9; bal.@12 R.1@6	Extend top & bot bars to south end of NB 21
NB23	24	30	5	8	A	2 4	8 8	K J	Left Right	3		L.1@6; bal.@12 R.1@4; 12@8	
NB24	24	30	4 4	8 8	A B	4 4	9 9	G L	Right	3		L.1@3; 10@6; bal.@12 R.1@6	
NB25	24	30	4 4	9 8	A A	4	9	L	Right	3		1@3; bal.@6	
NB26	24	30	4 4	8 8	A B	4	8	G		3		L.1@6; bal.@12 R.1@2½; 18@6½	
NB27	24	30	4 4	11 11	A B	5	11	G		3		L.1@2½; bal@7 R.1@2; 33@3½	
NB28	24	30	4 2	11 11	A D	5	11	H		3		L.1@2, 28@4 R.1@4; bal@7	See 8-JK8-22.17
NB29	24	32|81	See Detail on 8-JK8-22.17										
NB30	24	30	5	8	A	4 4	8 10	G K	Left	3		L.1@2, 14@4 R.1@6; bal@12	Extend G & K bars 7'8" beyond col 134 (See 8-JK8-22.17)
NB30A	14	20	3	8	A	2	8	N		3		1@4; bal@8	See 8-JK8-2.2 for det. of beam to slurry wall connection
NB30B	14	20	3	8	A	2	8	G		3		1@4; bal@8	

Note: See 8-JK5-21 for typical beam detail and bar types

LICENSED PROFESSIONAL ENGINEER — LESLIE E. ROBERTSON — No. 34360 — UNIVERSITY OF THE STATE OF NEW YORK

DRAWN G.K.

REVIEWED E.L.

8-JK5-22.1

WORTHINGTON, SKILLING, HELLE & JACKSON — Civil & Structural Engineers

PROJECT THE WORLD TRADE CENTER | TITLE CONCRETE BEAM SCHEDULE | DATE 7-9-68

REVISIONS
10-30-69 GEN. REV.
4-8-70

NORTH PROJECTION

MK	CONCRETE SECTION W	D	BOTTOM BARS No	Size	Type	TOP BARS No	Size	Type	Location	STIRRUPS Size	Type	Spacing each end	REMARKS
NB31	18	24	2 2	7 6	B B	3	7	G		3		1@6; bal.@12" Ext. 1@4; 8@8 Int.	*
NB32	18	24	2	6	C	2	7	H		3		1@6; bal. @12"	
NB33	18	24	3	5	C	2 3	5 7	K K	L R	3		1@6; bal.@12" L. 1@4; 3@8 R.	
NB34	18	24	3	5	C	2	5	K	R	3		1@6, bal@12"	
NB35	18	24	2	5	B	2	6	G		3		1@6; bal@12"	*
NB36	32	22	4	6	B	4	7	G		3		1@6; bal@12	*
NB37	32	22	7	7	C	3 5	7 7	K K	L R	3		1@4½; 7@9; bal.@12"	
NB38	32	22	5	7	C	4	7	H		3		1@4½; 7@9; bal.@12"	
NB39	32	22	5	7	C	4 3	7 7	K K	L R	3		1@4½; 7@9; bal.@12"	
NB40	32	22	4	5	B	4	7	G		3		1@6; bal.@12"	*
NB41	32	22	5	6	B	3	8	G		3		1@6; bal.@12" Ext. 1@4½; 5@9 Int.	*
NB42	32	22	5	6	C	2 5	8 8	K K	L R	3		1@4½; 5@9; bal@12"	
NB43	32	22	5	6	C	2	7	K	R	3		1@6; bal.@12"	
NB44	32	22	3	5	B	3	6	G		3		1@6; bal.@12	*
NB45	24	66	8 8 6	11 11	B A D	8 2	10 8	G J	L	4		1@8; bal.@6" Ext. 1@3½; 26@7½" Int.	* Beam NB45 spans pwt col. JB2-& JB2-3
NB46	24	66	4	8	C	4 4	10 10	K H	L	3		1@3; bal.@6"	Add -6@12 hor. cont. ea. face of beams
NB47	24	66	4	8	B	4	8	G		3		1@6; bal@12"	*
NB48	18	24	2	6	B	2	6	G		3		1@6; bal@12"	*
NB49	18	24	3	6	C	2 3	6 8	K K	L R	3		1@6; bal.@12 L. 1@4; 5@8 R.	
NB50	18	24	2	6	C	1	6	K	R	3		1@6 bal.@12"	
NB51	18	24	3	6	B	2	6	G		3		1@6 bal.@12"	*
NB52	18	77½											
NB53	14	77½	See Detail on 8-JK8-22.13										
NB54	14	77½											
NB55	14	77½											
NB54A	30	28	See sect. 5-5 on 8-JK8-22										

Note:
1. See 8-JK5-21 for typical beam detail and bar types.
2. * See 8-JK5-2.2 for detail of beam to slurry wall connection.

LICENSED PROFESSIONAL ENGINEER LESLIE E. ROBERTSON No. 34360 UNIVERSITY OF THE STATE OF NEW YORK

DRAWN S.C.
REVIEWED E.L.

8-JK5-22.2

WORTHINGTON, SKILLING, HELLE & JACKSON — Civil & Structural Engineers

PROJECT THE WORLD TRADE CENTER | TITLE CONCRETE BEAM SCHEDULE | DATE 7-9-68

REVISIONS
3-7-69
7-16-69

NORTH PROJECTION

MK.	CONCRETE SECTION		BOTTOM BARS			TOP BARS				STIRRUPS			REMARKS
	W	D	No.	Size	Type	No.	Size	Type	Location	Size	Type	Spacing each end	
NB101	36	22	2 2	7 5	A A	2 4	8 7	G G		3		1@6, 8@12	
NB102	36	22	6	7	A	2	7	L	R	3		1@4½, 6@9, 8@12	
NB103	36	22	4	7	A	4	8	H		3		1@4½, 6@9, 8@12	
NB104	36	22	6	6	A	2	7	L	L	3		1@4½, 6@9, 8@12	
NB105	36	22	4	6	A	2 4	7 7	L G	Interior support Exterior support	3		1@6, 8@12	
NB110	30	22	4	7	B(R)	4	6	G		3		1@6, 8@12 1@4½, 4@9	L R
NB111	30	22	4	7	B(L)	2	8	H		3		1@4½, 4@9, 8@12	
NB112	30	22	4	7	A	4	8	L	L	3		1@4½, 4@9, 8@12	
NB113	30	22	4	7	A	4	8	G	R	3		1@6, 8@12	
NB114	20	36	5 5	9 9	A A	5 2	8 8	G L	Exterior support Interior support	3		1@4½, 8@9	Add 2-#5 (A) at mid-depth (one e.f.)
NB115	20	36	2	7	B(R)	3	8	H		3		1@6, 8@12	
NB116	20	36	3	7	B(L)	2	8	L	Exterior support	3		1@6, 8@12	
NB117	21	31	4	7	B	2	7	G		3		1@6, 8@12	
NB118	21	31	4	7	C	2	8	H		3		1@4½, 8@9, 8@12 1@4½, 6@9	L R
NB119	21	31	4	7	A	2	7	H		3		1@6, 8@12	
NB120	21	31	4	7	A	2	7	G		3		1@4½, 4@9, 8@12 1@6	L R
NB121	21	24	4	7	A	4	8	G		3		1@6, 8@12	
NB122	21	24	4	7	A	4	9	C	R	3		1@4½, 5@9, 8@12	
NB123	21	24	4	5	A	-	-	-	See NB124	3		1@4½, 4@9, 8@12 1@6	L R
NB124	21	24	4	5	A	4	5	G	R	3		1@6, 8@12	

Note:
See 8-JKS-21 for typical beam detail and bar types.

LICENSED PROFESSIONAL ENGINEER — LESLIE E. ROBERTSON — No. 34360 — UNIVERSITY OF THE STATE OF NEW YORK

DRAWN J. Adams
REVIEWED E.E.R.

8-JKS-22.3

WORTHINGTON, SKILLING, HELLE & JACKSON — Civil & Structural Engineers

PROJECT THE WORLD TRADE CENTER | TITLE CONCRETE BEAM SCHEDULE | DATE 7-9-68

REVISIONS

2-27-70 GEN. REV.

8-27-70

SOUTH PROJECTION

MK	CONCRETE SECTION W	CONCRETE SECTION D	BOTTOM BARS No.	BOTTOM BARS Size	BOTTOM BARS Type	TOP BARS No.	TOP BARS Size	TOP BARS Type	TOP BARS Location	STIRRUPS Size	STIRRUPS Type	STIRRUPS Spacing each end	REMARKS
SB1	48	30	4 4	8 8	A B	4 12	7 9	J L	L R	3	B	L: 1@6, Bal.@12 R: 1@2, 10@4, Bal.@12	J bar - see note on plan
SB2	48	30	8	8	A	12	8	L	R	3	B	1@3, 13@4½, Bal.@12	
SB3	48	30	4 4	7 7	A B	4	7	K	R	3	B	L: 1@2½, 10@5 R: 1@6, Bal.@12	
SB4	48	30	10	7	A	4	6	N		3	B	1@6, Bal.@12	N bar - see note on plan
SB5	28	26	11	8	A	4	6	N		3	B	1@3, 9@6, Bal.@12	
SB6	28	30	9 9	9 9	A D	5 5	6 6	J J	L R	3	B	1@2, 10@3, 12@4, Bal@12	J bar - see note on plan
SB7	32	30	9	9	A	5 5	6 6	J J	L R	3	B	1@3, 4@6, Bal@12	J bar - see note on plan
SB8	14	20	4	6	A	3	6	N		3	B	1@5, Bal@10	
SB9	14	20	4	6	A	3	6	N		3	B	1@5, Bal@10	

LICENSED PROFESSIONAL ENGINEER — LESLIE E. ROBERTSON — No. 34360 — UNIVERSITY OF THE STATE OF NEW YORK

DRAWN S.C.

REVIEWED E.L.

Note:
See 8-JK5-21 for typical beam detail and bar types.

8-JK5-22.4

WORTHINGTON, SKILLING, HELLE & JACKSON — Civil & Structural Engineers

PROJECT: THE WORLD TRADE CENTER | TITLE: CONCRETE BEAM SCHEDULE | DATE: 1-4-68

REVISIONS

2-27-70 GEN. REV.

SOUTH PROJECTION

MK	CONCRETE SECTION W	CONCRETE SECTION D	BOTTOM BARS No.	BOTTOM BARS Size	BOTTOM BARS Type	TOP BARS No.	TOP BARS Size	TOP BARS Type	TOP BARS Location	STIRRUPS Size	STIRRUPS Type	STIRRUPS Spacing each end	REMARKS
SB31	32	24	5 3	7 7	A D	6 9	8 8	J K	L R	4		1@6, Bal.@12	See B-JK5-2.2 for beam to slurry wall connection detail
SB32	32	24	4 4	7 7	A C	6	8	K	R	4		1@6, Bal.@12	
SB33	32	24	6	7	A					4		1@6, Bal.@12	
SB34	32	24	2 4	7 7	A C	8	8	H		4		1@6, Bal.@12	
SB35	32	24	5 2	8 8	A D	3	9	K	R	4		1@4½, 8@8, Bal.@12	
SB36	32	24	5 3	7 7	B D	4	9	G		4		1@6, Bal.@12	See B-JK5-2.2 for beam to slurry wall connection detail
SB37	18	24	4	9	A	4 2 3	6 10 6	J K J	L R R	3		1@3, 4@6, 4@9, Bal@12	Extr. K bars 4'-6" into 10" wall
SB38	20	26	4	10	A	2 3 5	6 10 6	J K J	L L R	3		1@2½, 6@5, 6@7, 4@9, Bal@12	Extr. K bars 4'-6" into 10" wall
SB39	24	20	6	6	A	6 6	6 6	K K	L R	3		1@6, Bal.@12	
SB40	24	20	3 2	6 6	A C	6	6	K	R	3		1@6, Bal.@12	
SB41	24	20	6	6	A	6	6	K	R	3		1@6, Bal.@12	

Note:
See 8-JK5-21 for typical beam detail and bar types.

LICENSED PROFESSIONAL ENGINEER — LESLIE E. ROBERTSON — No. 34360 — UNIVERSITY OF THE STATE OF NEW YORK

DRAWN S.C.

REVIEWED E.L.

8-JK5-22.5

WORTHINGTON, SKILLING, HELLE & JACKSON — Civil & Structural Engineers

PROJECT: THE WORLD TRADE CENTER | TITLE: CONCRETE BEAM SCHEDULE | DATE: 7-9-68

REVISIONS
4-16-69
1-23-70
4-9-70

SOUTH PROJECTION

MK.	CONCRETE SECTION W	CONCRETE SECTION D	BOTTOM BARS No.	BOTTOM BARS Size	BOTTOM BARS Type	TOP BARS No.	TOP BARS Size	TOP BARS Type	TOP BARS Location	STIRRUPS Size	STIRRUPS Type	STIRRUPS Spacing each end	REMARKS
SB61	36	24	8	7	A	6 9	8 8	J K	L R	4	□	1@6, bal.@12	
SB62	36	24	4 4	7 7	A C	6	7	K	R	4	□	1@6, bal.@12	
SB63	36	24	6	7	A					4	□	1@6, bal.@12	
SB64	36	24								4	□	1@6, bal.@12	
SB65	36	24							See Sect. P-P	4	□	1@4, 3@8, bal.@12	
SB66	36	24							on 8-JK8-21	4	□	1@6, bal.@12	
SB67	36	24	4 4	6 6	A B					4	□	1@6, bal.@12	
SB68	36	24	8	6	A	8	8	H	Ext. 4-H. bars, North to 12"-wall with hooks	4	□	1@6, bal.@12	See also Sect. T-T on 8-JK8-21
SB69	36	24-16	See Sect. T-T on 8-JK8-21										
SB70	30	30	8	8	A	3 6	8 8	K J	L R	4	□	1@6, bal.@12	

Note:
See 8-JK5-21 for typical beam detail and bar types.

LICENSED PROFESSIONAL ENGINEER — LESLIE E. ROBERTSON — No. 34360 — UNIVERSITY OF THE STATE OF NEW YORK

DRAWN S.C.
REVIEWED E.L.

8-JK5-22.6

WORTHINGTON, SKILLING, HELLE & JACKSON — Civil & Structural Engineers

PROJECT: THE WORLD TRADE CENTER | TITLE: CONCRETE BEAM SCHEDULE | DATE: 7-9-68

REVISIONS
1-23-70

SOUTH PROJECTION

MK.	CONCRETE SECTION W.	CONCRETE SECTION D	BOTTOM BARS No.	BOTTOM BARS Size	BOTTOM BARS Type	TOP BARS No.	TOP BARS Size	TOP BARS Type	TOP BARS Location	STIRRUPS Size	STIRRUPS Type	STIRRUPS Spacing each end	REMARKS
SB91	10	16	3	6	A	2 1/2	6	J	L R	3	A	10@4, bal.@8	*
SB92	10	16	2	6	A	2	6	*		3	A	10@4, bal.@8	*Top cont. bar - see 8-JKS-2.2 for beam to wall conn.

Note:
See 8-JK5-21 for typical beam detail and bar types.

LICENSED PROFESSIONAL ENGINEER
LESLIE E. ROBERTSON
No. 34360
UNIVERSITY OF THE STATE OF NEW YORK

DRAWN
S.C.
REVIEWED
E.L.

8-JK5-22.7

WORTHINGTON, SKILLING, HELLE & JACKSON — Civil & Structural Engineers

PROJECT: THE WORLD TRADE CENTER | TITLE: CONCRETE BEAM SCHEDULE | DATE: 12-10-69

REVISIONS

MK.	CONCRETE SECTION W.	CONCRETE SECTION D	BOTTOM BARS No.	BOTTOM BARS Size	BOTTOM BARS Type	TOP BARS No.	TOP BARS Size	TOP BARS Type	TOP BARS Location	STIRRUPS Size	STIRRUPS Type	STIRRUPS Spacing each end	REMARKS
B271	36	24	4 2	G G	A B	2 2 4	9 6 9	G J K	Left Right	3		L. 1@6, Bal.@12 R. 1@4, 4@8	
B272	36	24	4 2	8 8	A C					3		L. 1@4, 10@8, Bal.@12 R. 1@4, 7@8	See also Sect. C-C on 8-JK7-5
B273	36	24	See Section C-C on 8-JK7-5									→	
B274	36	24	4 2	7 7	A B	6 6	6 9	J K	Left Right	3		L. 1@4, 4@8, Bal.@12 R. 1@4, 7@8	See also Sect. C-C on 8-JK7-5
B275	36	24	4 2	8 8	A B	6 6	6 9	J K	Left Right	3		L. 1@4, 5@8, Bal.@12 R. 1@4, 8@8	
B276	36	24	2 2 3	7 7 7	A C D	4 2	10 8	K K	Right Right	3		1@4, 7@8, Bal.@12	

Note:
See 8-JKS-21 for typical beam detail and bar types.

LICENSED PROFESSIONAL ENGINEER — LESLIE E. ROBERTSON — No. 34360 — UNIVERSITY OF THE STATE OF NEW YORK

DRAWN: S.C.
REVIEWED: E.L.

8-JK5-22.27

WORTHINGTON, SKILLING, HELLE & JACKSON — Civil & Structural Engineers

PROJECT: THE WORLD TRADE CENTER | TITLE: CONCRETE BEAM SCHEDULE | DATE: 12-22-69

REVISIONS

MK	CONCRETE SECTION W	CONCRETE SECTION D	BOTTOM BARS No	BOTTOM BARS Size	BOTTOM BARS Type	TOP BARS No	TOP BARS Size	TOP BARS Type	TOP BARS Location	STIRRUPS Size	STIRRUPS Type	STIRRUPS Spacing each end	REMARKS
B291	36	24	2 2 2	7 7 7	A C D					3	[H]	1@4, 8@8, Bal.@12	
B292	See 8-JK7-G.13												
B293	36	24	4 2	6 6	A C	6	6	J	Right	3	[H]	1@4, 3@8, Bal.@12	
B294	36	24	4 2	7 7	A B	4 2 6	6 6	K J	Left Left Right	3		1@4, 3@8, Bal.@12	Ext.(B) & (K) bars to Exp. Jt. See Sect. R-R on 8-JK7-G
B295	36	24	4 2	7 7	A B					3		1@6, Bal.@12	
B296	36	24	4 2	6 6	A C	2 2 4	5 9 9	H H K	— — Right	3		L. 1@6, Bal.@12 R. 1@4, 6@8	Ext. left end of all (H) bars to 8" wall at pit with hooks
B297	36	24	4 2	8 8	A C	4 2	6 6	K J	Right Right	3		L. 1@3, 5@6, 7@8, Bal.@12 R. 1@4, 7@8	Ext. (C) & (K) bars to Exp. Jt. See Sect. R-R on 8-JK7-G
B298	36	24	2 2 3	7 7 7	A C D	4 2	10 9	K K	Right Right	3		1@4, 10@8, Bal.@12	
B299	36	24	2 2 3	7 7 7	A C D	4 2	10 9	K K	Right Right	3		1@4, 12@8, Bal.@12	
B2910	36	24	4 2	8 8	A B	6	6	J	Right	3		L. 1@4, 12@8, Bal.@12 R. 1@4, 8@8	
B2911	36	24	4 2	6 6	A B	4 2 6	6 6	K J	Left Left Right	3		1@6, Bal.@12	Ext. (B) & (K) bars to Exp. Jt. See Sect. R-R on 8-JK7-G
B2912	36	24	4 2	6 6	A B					3		1@6, Bal.@12	
B2913	36	24	4 2	6 6	A C	2 2 4	6 9 9	H H K	— — Right	3		L. 1@6, Bal.@12 R. 1@4, 6@8	Ext. left end of all (H) bars to 8" wall at pit with hooks
B2914	36	24	2 2 3	8 8 8	A C D	4 2	6 6	K J	Right Right	5	[H]	L. 1@3, 6@6, 10@8, Bal.@12 R. 1@4, 8@8	Ext. (C) & (K) bars to Exp. Jt. See Sect. R-R on 8-JK7-G

Note:
See 8-JKS-21 for typical beam detail and bar types.

LICENSED PROFESSIONAL ENGINEER — LESLIE E. ROBERTSON — No. 34360 — UNIVERSITY OF THE STATE OF NEW YORK

DRAWN: S.C.

REVIEWED: E.L.

8-JK5-22.29

WORTHINGTON, SKILLING, HELLE & JACKSON — Civil & Structural Engineers

PROJECT: THE WORLD TRADE CENTER | TITLE: CONCRETE BEAM SCHEDULE | DATE: 12-18-68

REVISIONS
1-16-69

MK	CONCRETE SECTION W	CONCRETE SECTION D	BOTTOM BARS No.	BOTTOM BARS Size	BOTTOM BARS Type	TOP BARS No.	TOP BARS Size	TOP BARS Type	TOP BARS Location	STIRRUPS Size	STIRRUPS Type	STIRRUPS Spacing each end	REMARKS
B301	27	22	2 2	7 7	B D	2 2	9 9	G L	Left Right	4	U	B@6, B@12	
B302	27	22	2 2	7 7	C D	2 2	9 9	K L	Right	4	U	10@6, B@12	
B303	27	22	2 2	7 7	C D	2 2	7 7	K L	Right	4	U	10@6, B@12	
B304	27	22	2 2	7 7	C D	2 2	9 9	L G	Left Right	4	U	B@4, 4@8, B@12	
B305	12	16	3	7	A	2	6	G	Hook left	3	U	B@6, B@12	

Note:
See 8-JK5-21 & 8-JK8-42 for typical beam detail and bar types.

LICENSED PROFESSIONAL ENGINEER — LESLIE E. ROBERTSON — No. 34360 — STATE OF NEW YORK

DRAWN: S.C.
REVIEWED: J.M. & E.L.

8-JK5-22.30

WORTHINGTON, SKILLING, HELLE & JACKSON — Civil & Structural Engineers

PROJECT THE WORLD TRADE CENTER | TITLE CONCRETE BEAM SCHEDULE | DATE 2-25-70

REVISIONS

MK.	CONCRETE SECTION W	D	BOTTOM BARS No.	Size	Type	TOP BARS No.	Size	Type	Location	STIRRUPS Size	Type	Spacing each end	REMARKS
B311	36	24	4 2	7 7	A B	6 6	6 9	J K	Left Right	3		L.1@4, 6@8, Bal.@12 R.1@4, 12@8	
B312	36	24	4 2	6 6	A C	6	8	K	Right	3		1@4, 8@8, Bal.@12	
B313	36	24	4 2	6 6	A C	6	8	K	Right	3		1@4, 7@8, Bal.@12	
B314	36	24	4 2	6 6	A C	4 2	10 8	K K	Right	3		1@4, 8@8, Bal.@12	
B315	36	24	4 2	8 8	A C	1 2	6 6	K J	Right Right	3		L.1@3, 5@6, 8@8 R.1@4, 7@8, Bal.@12	Ext.(C) & (K) bars to Exp.Jt. See Sect. R-R on 8-JK1-6
B316	36	24	4 2	8 8	A B	6	6	J	Left	3		L.1@4, 7@8, Bal.@12 R.1@3, 5@6, 7@8	
B317	36	24	3 2	8 8	A B	6 4 2	6 10 7	J K K	Left Right Right	3		L.1@4, 7@8, Bal.@12 R.1@3, 5@6, 8@8	
B318	36	24	4 2	6 6	A C	4 2	9 7	K K	Right Right	3		1@4, 9@8, Bal.@12	
B319	36	24	4 2	6 6	A C	4 2	9 6	K K	Right Right	3		1@4, 8@8, Bal.@12	
B3110	36	24	4 2	6 6	A C	4 2	10 8	K K	Right Right	3		L.1@4, 8@8, Bal.@12 R.1@4, 10@8	
B3111	36	24	4 2	8 8	A C	4 2	6 6	K J	Right Right	3		L.1@3, 6@6, 10@8 R.1@4, 8@8, Bal.@12	Ext.(C) & (K) bars to Exp.Jt. See Sect. R-R on 8-JK1-6
B3112	36	24	2 2 3	8 8 8	A C D	6	6	J	Left	3		L.1@4, 8@8, Bal.@12 R.1@3, 6@6, 10@8	

Note:
See 8-JKS-21 for typical beam detail and bar types.

LICENSED PROFESSIONAL ENGINEER LESLIE E. ROBERTSON No. 34360 UNIVERSITY OF THE STATE OF NEW YORK

DRAWN S.C.

REVIEWED E.L.

8-JKS-22.31

WORTHINGTON SKILLING HELLE & JACKSON Civil & Structural Engineers

PROJECT THE WORLD TRADE CENTER | TITLE CONCRETE BEAM SCHEDULE | DATE 12-18-68

REVISIONS

1-16-69

MK	CONCRETE SECTION W	CONCRETE SECTION D	BOTTOM BARS No.	BOTTOM BARS Size	BOTTOM BARS Type	TOP BARS No.	TOP BARS Size	TOP BARS Type	TOP BARS Location	STIRRUPS Size	STIRRUPS Type	STIRRUPS Spacing each end	REMARKS
B321	18	16	4	7	A	3	6	N		3	□	6@6, 8@12	

Note:
See 8-JK5-21 for typical beam detail and bar types.

LICENSED PROFESSIONAL ENGINEER
LESLIE E. ROBERTSON
No. 34360
UNIVERSITY OF THE STATE OF NEW YORK

Drawn S.C.
Reviewed J.M.&E.L.

8-JK5-22.32

WORTHINGTON, SKILLING, HELLE & JACKSON — Civil & Structural Engineers

PROJECT THE WORLD TRADE CENTER | TITLE CONCRETE BEAM SCHEDULE | DATE 3-4-70

REVISIONS

MK	CONCRETE SECTION		BOTTOM BARS			TOP BARS				STIRRUPS			REMARKS
	W	D	No.	Size	Type	No.	Size	Type	Location	Size	Type	Spacing each end	
B331	36	24	4 2	6 6	A C	2 2 2	10 10 8	K H H	Left — — —	3		L.1@4, 6@8, R.1@6, BAL.@12	Ext. right end of all (H) bars to 8" wall @ plf with hooks.
B332	36	24	4 2	6 6	A B				— — —	3		1@6, BAL.@12	
B333	36	24	4 2	6 6	A B	6 4	6 9	J K	Left Right	3		1@4, 4@8, BAL.@12	
B334	36	24	4 2	7 7	A C	4 2	8 7	K K	Right Right	3		1@4, 7@8, BAL.@12	
B335	36	24	4 2	6 6	A C					3		1@4, 4@8, BAL.@12	
B336	36	24	4 2	6 6	A C	6	6	H		3		1@6, BAL.@12	Ext. (C) & (K) bars to exp. jt. see sect. R-R, on 8-JK7-6
B337	36	24	4 2	9 9	A B	6	6	J	Left	3		L.1@4, 6@8, BAL.@12 R.1@4, 9@8.	
B338	36	24	4 2	6 6	A C	2 2 2	9 9 7	K H H	Left — —	3		L.1@4, 4@8 R.1@6, BAL.@12	
B339	36	24	4 2	6 6	A B	6	6	J	Right	3		1@6, BAL.@12	
B3310	36	24	4 2	6 6	A B	6 6	6 7	J K	Left Right	3		1@4, 3@8, BAL.@12	
B3311	36	24	2 2 3	7 7 7	A C D	6	10	K	Right	3		L.1@4, 8@8, BAL.@12 R.1@3, 4@6, 7@8	
B3312	36	24	4 2	8 8	A C	4 2	6 6	K J	Right Right	3		L.1@3, 6@6, 10@8 R.1@4, 8@8, BAL.@12	Ext. (C) & (K) bars to exp. jt. see sect. R-R on 8-JK7-6
B3313	36	24	4 2	6 6	A B	6 6	6 6	J K	Left Right	3		1@4, 3@8; BAL.@12	
B3314	36	24	4 2	6 6	A C	6	6	J	Right	3		1@4, 3@8, BAL.12	

Note:
See 8-JK5-21 for typical beam detail and bar types.

LICENSED PROFESSIONAL ENGINEER — LESLIE E. ROBERTSON — No. 34350 — UNIVERSITY OF THE STATE OF NEW YORK

DRAWN V.H.A.
REVIEWED K.H. & E.L.

8-JK5-22.33

WORTHINGTON, SKILLING, HELLE & JACKSON — Civil & Structural Engineers

PROJECT THE WORLD TRADE CENTER | TITLE CONCRETE BEAM SCHEDULE | DATE 12-18-68

REVISIONS

MK	CONCRETE SECTION W	CONCRETE SECTION D	BOTTOM BARS No.	BOTTOM BARS Size	BOTTOM BARS Type	TOP BARS No.	TOP BARS Size	TOP BARS Type	TOP BARS Location	STIRRUPS Size	STIRRUPS Type	STIRRUPS Spacing each end	REMARKS
B521	27	22	2 2	7 7	B D	2 2	8 9	G L	Left Right	4	⊓	8@6, B@12	
B522	27	22	2 2	7 7	C D	2 2	8 9	K L	Right	4		8@6, B@12	
B523	27	22	2 2	7 7	C D	2 2	7 7	K L	Right	4		8@6, B@12	
B524	27	22	2 2	7 7	C D	2 2	8 9	K L	Right	4		10@6, B@12	
B525	27	22	2 2	7 7	C D	2	9	L	Right	4		10@6, B@12	
B526	27	22	2 2	7 7	B D	2	8	G	Right	4		8@6, B@12	

Note:
See 8-JKS-21 & 8-JK8-42 for typical beam detail and bar types.

LICENSED PROFESSIONAL ENGINEER — LESLIE E. ROBERTSON — No. 34360 — UNIVERSITY OF THE STATE OF NEW YORK

DRAWN S.C.
REVIEWED J.M. L.E.L.

8-JK5-22.52

WORTHINGTON, SKILLING, HELLE & JACKSON — Civil & Structural Engineers

PROJECT: THE WORLD TRADE CENTER | TITLE: CONCRETE BEAM SCHEDULE | DATE: 12-18-68

REVISIONS

MK	CONCRETE SECTION W	CONCRETE SECTION D	BOTTOM BARS No.	BOTTOM BARS Size	BOTTOM BARS Type	TOP BARS No.	TOP BARS Size	TOP BARS Type	TOP BARS Location	STIRRUPS Size	STIRRUPS Type	STIRRUPS Spacing each end	REMARKS
B541	27	22	2-2	11-10	B-D	2	9	J	Left	4	⊔	8@4, 6@8, 8@12	
B542	27	22	2-2	7-7	C-D	2-2	11-11	P-P	—	4	⊓	10@6, 8@12	l_1=8', l_1=18', l_2=8'
B543	27	22	2-4	10-11	C-D	2-4	10-11	P-L	Right	4	⊓	16@3, 10@6, 8@12	l=8'
B544	27	22	2-4	10-11	C-D	2	10	L	Right	4	⊔	16@3, 10@6, 8@12	

Note:
See 8-JKS-21 & 8-JK8-42 for typical beam detail and bar types.

LICENSED PROFESSIONAL ENGINEER — LESLIE E. ROBERTSON — No. 34360 — UNIVERSITY OF THE STATE OF NEW YORK

DRAWN: S.C.
REVIEWED: J.M. & L.E.R.

8-JKS-22.54

REVISIONS
1-31-69

THE WORLD TRADE CENTER | TITLE CONCRETE BEAM SCHEDULE | DATE 12-18-68

HELLE & JACKSON
Civil & Structural Engineers

MK.	CONCRETE SECTION W	CONCRETE SECTION D	BOTTOM BARS No.	BOTTOM BARS Size	BOTTOM BARS Type	TOP BARS No.	TOP BARS Size	TOP BARS Type	TOP BARS Location	STIRRUPS Size	STIRRUPS Type	STIRRUPS Spacing each end	REMARKS
B561	27	22	2 2	7 7	C D	4	11	P	—	4	U	7@6, 8@12	
B562	27	22	2 2	7 7	C D	2 2	7 9	K L	Right	4		6@4, 6@8, 8@12	l1=10', l2=8'
B563	27	22	2 2	7 7	C D	2 2	7 9	K L	Right	4		10@6, 8@12	
B564	27	22	2 2	7 7	C D	2 2	9 9	L P	Right	4		10@6, 8@12	
B565	27	22	2 2	7 7	C D	2 2	11 9	P L	Right	4		10@4, 4@8, 8@12	
B566	27	22	2 2	7 9	C D	2 2	7 7	K L	Right	4		10@6, 8@12	l=8'
B567	27	26	2 2	7 11	C D	2 2	7 7	K L	Right	4		7@6, 8@12	
B568	27	26	2 2	7 11	C D	2	11	L	Right	4		7@6, 8@12	

Note:
See 8-JK5-21 & 8-JK8-42 for typical beam detail and bar types.

LICENSED PROFESSIONAL ENGINEER
LESLIE E. ROBERTSON
No. 34360
UNIVERSITY OF THE STATE OF NEW YORK

DRAWN S.C.
REVIEWED L.E.R.

8-JK5

WORTHINGTON, SKILLING, HELLE & JACKSON — Civil & Structural Engineers

PROJECT: THE WORLD TRADE CENTER | TITLE: CONCRETE BEAM SCHEDULE | DATE: 12-18-68

REVISIONS
1-31-69
8-25-69

MK	CONCRETE SECTION W	CONCRETE SECTION D	BOTTOM BARS No.	BOTTOM BARS Size	BOTTOM BARS Type	TOP BARS No.	TOP BARS Size	TOP BARS Type	TOP BARS Location	STIRRUPS Size	STIRRUPS Type	STIRRUPS Spacing each end	REMARKS
B571	27	26	2 2	9 7	C D	2	11	P	—	4	⊓	10@3,8@6,B@12	* L=8'
B572	27	26	2 4	11 11	C D	2 2	11 11	P P	—	5	⊓	12@4,8@8,B@12	* L=8' L=8' L=20'
B573	27	26	2 5	11 11	B D	4 2	11 9	L J	Left Right	5	⊓	14@4,8@8,B@12	*
B574	27	26	2 6	11 11	B D	2 4	9 11	J L	Left Right	4	⊓	14@3,10@6,B@12	*
B575	27	26	2 2	7 7	C D	2 2	11 11	P P	—	4	⊓	10@6,B@12	* L=8' L=20' L=8'
B576	27	26	2 2	7 7	C D	4	11	L	Right	4	⊓	6@4,7@8,B@12	*
B577	27	26	2 2	7 7	C D	4	11	L	Right	4		12@3,10@6,B@12	
B578	24	26	4	8	A	3	7	G		3		1@6, 8@12	
B579	24	26	6	8	A	3	7	G		3		1@6, 8@12	
B5710	24	26	4	8	A	3	8	G		3		1@6, B@12	
B5711	24	26	6	9	A	3	8	G		4		1@6, B@12	
B5712	24	26	4	8	A	3	7	N		3	⊓	1@6, B@12	
B5713	36	26	6	8	A	5	7	G		3	⊓	1@6, B@12	Provide 4 #8 (cont.) hor. bars along east side of beam
B5714	36	26	6	8	A	3	7	H		3	⊓	1@6, B@12	
B5715	36	26	6	8	A	5	7	G		3	⊓	1@6, B@12	
B5716	24	26	4	8	A	3	6	N		3	⊓	1@6, B@12	

Note:
See 8-JK5-21 for typical beam detail and bar types.
* See 8-JK8-42 for additional beam details.

LICENSED PROFESSIONAL ENGINEER — LESLIE E. ROBERTSON — No. 34360 — UNIVERSITY OF THE STATE OF NEW YORK

DRAWN S.C.
REVIEWED J.M.A. E.L.

8-JK5-22.57

WORTHINGTON, SKILLING, HELLE & JACKSON — Civil & Structural Engineers

PROJECT THE WORLD TRADE CENTER | TITLE CONCRETE BEAM SCHEDULE | DATE 8-25-69

REVISIONS

2-16-70

MK.	CONCRETE SECTION		BOTTOM BARS			TOP BARS				STIRRUPS			REMARKS
	W	D	No.	Size	Type	No.	Size	Type	Location	Size	Type	Spacing each end	
B581	24	26	2 2 2	11 9 11	A D A	2 2 2	11 9 7	K G J	Left Right	4	⊓	1@5, 4@10, B@12	* Place K & J bars at 2nd layer to ea. side of cols.
B582	27	26	2 2	7 7	C D	4	11	L	Right	4	⊔	6@4, 7@8, B@12	*
B583	27	26	2 2	7 7	C D	4	11	L	Right	4	⊔	6@4, 7@8, B@12	*
B584	27	26	2 2	7 7	C D	4	11	L	Right	4	⊔	6@4, 7@8, B@12	*
B585	27	26	2 4	9 11	B D	2 4	9 11	B J	Right	4	⊔	6@4, 7@8, B@12	* l_1 = 16', l_2 = 6'
B586	27	26	2 2	7 7	B D	4 4	7 7	K K	Left Right	3	⊔	8@6, B@12	*
B587	27	26	2 2	7 7	B D	4	7	K	Right	3	⊔	8@6, B@12	*

Note:
See 8-JK5-21 for typical beam detail and bar types.
* — see 8-JK8-42 for additional beam details.

LICENSED PROFESSIONAL ENGINEER
LESLIE E. ROBERTSON
No. 34360
UNIVERSITY OF THE STATE OF NEW YORK

DRAWN S.C.

REVIEWED E.L.

8-JK5-22.58

WORTHINGTON SKILLING HELLE & JACKSON — Civil & Structural Engineers

DATE 2-24-70

PROJECT THE WORLD TRADE CENTER

TITLE CONCRETE BEAM SCHEDULE

REVISIONS

3-16-70

MK.	CONCRETE SECTION W	CONCRETE SECTION D	BOTTOM BARS No.	BOTTOM BARS Size	BOTTOM BARS Type	TOP BARS No.	TOP BARS Size	TOP BARS Type	Location	STIRRUPS Size	STIRRUPS Type	STIRRUPS Spacing each end	REMARKS
B601	26	23	2 3	11 11	A D	2	11	N		4		20@3, 10@6, Bal.@12	Hook top bars around col. at each end
B602	27	22	2 2	8 8	B D	1 1	9 9	J K	Left	4		10@6, Bal.@12	
B603	27	22	2 2	7 7	C D	2	9	L	Left	4		10@6, Bal.@12	
B604	27	22	2 2	7 7	C D	2	9	K	Left	4		10@6, Bal.@12	
B605	27	22	2 2	7 7	C D	2	9	K	Left	4		10@4, Bal.@12	Extend K&C bars to right end of B607
B606	27	22	2 2	10 10	C D	4 2	9 9	L K	Left Right	4		10@4, Bal.@12	Cantilever beam
B607	27	22	Reinforcement from B606							4		@6 thru-out	

Notes:
1. See 8-JK5-21 for typical beam detail and bar types.
2. See 8-JK8-42 for additional beam details

8-JK5-22.60

LICENSED PROFESSIONAL ENGINEER
LESLIE E. ROBERTSON
No. 34360
UNIVERSITY OF THE STATE OF NEW YORK

DRAWN S.C.

WORTHINGTON SKILLING HELLE & JACKSON — Civil & Structural Engineers

PROJECT THE WORLD TRADE CENTER | TITLE CONCRETE BEAM SCHEDULE | DATE 12-18-68

REVISIONS
7-15-69
7-18-69

MK.	CONCRETE SECTION W	CONCRETE SECTION D	BOTTOM BARS No	BOTTOM BARS Size	BOTTOM BARS Type	TOP BARS No	TOP BARS Size	TOP BARS Type	TOP BARS Location	STIRRUPS Size	STIRRUPS Type	STIRRUPS Spacing each end	REMARKS
B621	16	18							See Sect. E-E on B-JK8-5G				
B622	16	18	5	5	A	4	6	K	Right	3	N/A	7@4, 4@8, B@12	
B623	12	24	4	8	A	2 4	5 7	N K	Right	3	U	6@5, 7@10, B@12	See Sect. B-B & D-D on B-JK8-5G
B624	12	24	5	5	A	2 2	5 6	N J	Right (Loc. side of hanger)	3		5@6, B@12	See Sect. B-B on B-JK8-5G and Sect. N-N on 9CX-141
B625	12	20	5	7	A	2 5	6 6	J K	Left Right	3		7@4, 8@8, B@12	See Sect. A-A & C-C on B-JK8-5G
B626	12	20	4	5	A	3	6	J	Right	3		6@5, 7@10, B@12	See Sect. A-A on 5CX-141 for beam width at end

Note:
See 8-JKS-21 for typical beam detail and bar types.

LICENSED PROFESSIONAL ENGINEER
LESLIE E. ROBERTSON
No. 34360
UNIVERSITY OF THE STATE OF NEW YORK

DRAWN S.C.
REVIEWED S.M.E.E.L.

8-JKS-22.62

WORTHINGTON, SKILLING, HELLE & JACKSON — Civil & Structural Engineers

PROJECT THE WORLD TRADE CENTER | TITLE CONCRETE BEAM SCHEDULE | DATE 12-18-68

REVISIONS

12-12-69 GEN. REV.

MK.	CONCRETE SECTION W	D	BOTTOM BARS No	Size	Type	TOP BARS No.	Size	Type	Location	STIRRUPS Size	Type	Spacing each end	REMARKS
BG41	16	20	4	6	A	3 6	5 7	J K	Left Right	3	⊔	L:1@4, 6@8, Be12 R:1@4, 12@8,	
BG42	16	20	4 4	8 8	B D	5	5	J	Right	3	⊔	L:1@4, 18@8, Be12 R:1@4, 12@8,	
BG43	16	See Section D-D on SCX-142										→	
BG44	16	See Section D-D on SCX-142										→	
BG45	16	20	4	6	A	4 7	5 7	J K	Left Right	3	⊔	L:1@4, 6@8, Be12 R:1@4, 12@8,	
BG46	16	20	3 3	7 7	B D	6	5	J	Right	3	⊔	L:1@3, 5@6, 14@8, Be12 R:1@4, 12@8,	
BG47	20	30	4 3	8 8	A D	6 10	6 9	K K	Left Right	3	⊔	L:1@3, 7@6, 12@7, Be12 R:1@4, 12@3, 6@4, 6@6, 14@7	
BG48	20	30	5 5	8 9	D A	6	7	K	Right	3	⊔	L:1@2, 10@3, 8@5, 12@7 R:1@3, 9@4, 11@7, Be12	
BG49	14	See Section A-A on SCX-142										→	
BG410	14	See Section A-A on SCX-142										→	
BG411	18	28	5	6	A	4	9	K	Right	3	⊔	1@4, 15@8, Be12	
BG412	18	28	4 2	8 8	A D	4	8	K	Right	3	⊔	L:1@4, 15@8, Be12 R:1@6	
BG413	12	See Section E-E on SCX-142										→	
BG414	12	See Section E-E on SCX-142										→	

Note:
See 8-JK5-21 for typical beam detail and bar types.

LICENSED PROFESSIONAL ENGINEER LESLIE E. ROBERTSON No. 34360 UNIVERSITY OF THE STATE OF NEW YORK

DRAWN S.C.

REVIEWED E.L.R.

WORTHINGTON, SKILLING, HELLE & JACKSON — Civil & Structural Engineers

PROJECT: THE WORLD TRADE CENTER | TITLE: CONCRETE BEAM SCHEDULE | DATE: 12-18-68

REVISIONS

MK.	CONCRETE SECTION W	CONCRETE SECTION D	BOTTOM BARS No.	BOTTOM BARS Size	BOTTOM BARS Type	TOP BARS No.	TOP BARS Size	TOP BARS Type	TOP BARS Location	STIRRUPS Size	STIRRUPS Type	STIRRUPS Spacing each end	REMARKS
B651	27	22	2-2	7-7	B-D	2-2	7-7	G-L	Left Right	4	U	8@6, B@12	
B652	27	22	2-2	7-7	C-D	2-2	7-7	K-L	Right	4		8@6, B@12	
B653	27	22	2-2	7-7	C-D	2-2	9-9	K-L	Right	4		8@6, B@12	
B654	27	22	2-2	7-7	C-D	2-2	9-9	K-L	Right	4		10@6, B@12	
B655	27	22	2-2	7-7	C-D	2-2	9-9	K-L	Right	4		12@6, B@12	
B656	27	22	2-2	7-7	C-D	2	9	L	Right	4		10@6, B@12	
B657	27	22	2-2	7-7	B-D	2	9	G	Right	4		8@6, B@12	

Note:
See 8-JKS-21 & 8-JKS-42 for typical beam detail and bar types.

LICENSED PROFESSIONAL ENGINEER — LESLIE E. ROBERTSON — No. 34360 — UNIVERSITY OF THE STATE OF NEW YORK

DRAWN S.C.
REVIEWED J.M.E.E.L.

8-JKS-22.65

WORTHINGTON, SKILLING, HELLE & JACKSON — Civil & Structural Engineers

PROJECT THE WORLD TRADE CENTER | TITLE CONCRETE BEAM SCHEDULE | DATE 12-18-68

REVISIONS

5-16-69

MK	CONCRETE SECTION		BOTTOM BARS			TOP BARS				STIRRUPS			REMARKS
	W	D	No.	Size	Type	No.	Size	Type	Location	Size	Type	Spacing each end	
B671	27	22	2 2	7 7	B D	2	9	J	Left	4	U	12@6, B@12	See 8-JK8-47.5
B672	27	22	2 4	11 11	C D	6	11	P	—	4	W	16@3, 12@6, B@12	1=8'
B673	27	22	2 2	11 10	C D	—	—	—	—	4	U	10@4, 6@8, B@12	
B674	27	22	2 2	7 7	C D	4	11	P	—	4	W	12@6, B@12	1=8'
B675	27	22	2 4	11 11	C D	2	11	P	—	4	W	16@3, 12@6, B@12	1=8'
B676	27	22	2 4	8 11	C D	4	11	P	—	4	W	10@4, 6@8, B@12	1=8'

Note:
See 8-JK5-21 & 8-JK8-42 for typical beam detail and bar types.

LICENSED PROFESSIONAL ENGINEER — LESLIE E. ROBERTSON — No. 34360 — UNIVERSITY OF THE STATE OF NEW YORK

Drawn S.C.
Reviewed J.M.E.S.C.

8-JK5-22.67

WORTHINGTON, SKILLING, HELLE & JACKSON — Civil & Structural Engineers

PROJECT THE WORLD TRADE CENTER | TITLE CONCRETE BEAM SCHEDULE | DATE 12-18-68

REVISIONS

4-2-69

MK.	CONCRETE SECTION W	CONCRETE SECTION D	BOTTOM BARS No.	BOTTOM BARS Size	BOTTOM BARS Type	TOP BARS No.	TOP BARS Size	TOP BARS Type	TOP BARS Location	STIRRUPS Size	STIRRUPS Type	STIRRUPS Spacing each end	REMARKS
B681	16	24	8	9	A	2 2 2	8 8 8	K N K	Left — Right	3	U	1@2, 12@5, 5@10, B@12	Bott. bars in 2 layers
B682	10	18	4	5	A	2	5	G	Hook Right	3		9@3, 4@6, B@12	
B683	14	24	6	9	A	3 2 3	7 7 7	K G J	Left Hook Right Right	3		7@4, 9@8, B@12	Theoretical top of bm slopes with ramp - min depth is 24". Bott. bars in 2 layers
B684	16	24	10	8	A	3 2 3	8 8 8	K N K	Left — Right	3		12@2, 28@5, B@12	Bott. bars in 2 layers
B685	10	20	3	5	A	2 1	5 5	G K	Hook Left Right	3		7@4, 5@8, B@12	
B686	10	20	3	5	A	2	5	G	Hook Right	3		7@4, 5@8, B@12	
B687	10	20	3	5	A	2 1	5 5	G K	Hook Left, Right	3		7@4, 5@8, B@12	
B688	10	20	3	5	A	2	5	G	Hook Right	3		7@4, 5@8, B@12	
B689	14	28	9	8	A	4 2 4	7 7 7	J N K	Left — Right	3		12@2, 16@5, 7@10, B@12	Depth of beam measured from top of curb
B6810	12	28	4	6	A	2 2	6 6	N K	Right	3		12@2, 5@5, B@12	Ditto

Note:
See 8-JK5-21 for typical beam detail and bar types.

LICENSED PROFESSIONAL ENGINEER
LESLIE E. ROBERTSON
No. 34360
UNIVERSITY OF THE STATE OF NEW YORK

DRAWN S.C.
REVIEWED J.M. & E.L.

8-JK5-22.68

WORTHINGTON, SKILLING, HELLE & JACKSON — Civil & Structural Engineers

PROJECT THE WORLD TRADE CENTER | TITLE CONCRETE BEAM SCHEDULE | DATE 12-18-68

REVISIONS

MK.	CONCRETE SECTION W	CONCRETE SECTION D	BOTTOM BARS No.	BOTTOM BARS Size	BOTTOM BARS Type	TOP BARS No.	TOP BARS Size	TOP BARS Type	TOP BARS Location	STIRRUPS Size	STIRRUPS Type	STIRRUPS Spacing each end	REMARKS
B691	27	22	2 2	7 7	C D	2 2	8 7	P L	— Right	4	⊓	7@6, 8@12	ℓ = 6'
B692	27	22	2 2	7 7	C D	2 2	7 9	K L	Right	4		7@6, 8@12	
B693	27	22	2 2	7 7	C D	2 2	7 9	K L	Right	4		10@6, 8@12	
B694	27	22	2 2	7 7	C D	2 2	7 7	K L	Right	4		10@6, 8@12	
B695	27	22	2 2	7 7	C D	2 2	7 7	K L	Right	4		7@6, 8@12	
B696	27	22	2 2	7 7	C D	2	9	L	Right	4		7@6, 8@12	

Note:
See 8-JK5-21 & 8-JK8-42 for typical beam detail and bar types.

LICENSED PROFESSIONAL ENGINEER — LESLIE E. ROBERTSON — No. 34360 — UNIVERSITY OF THE STATE OF NEW YORK

DRAWN: S.C.
REVIEWED: J.M. & E.L.

8-JK5-22.69

WORTHINGTON, SKILLING, HELLE & JACKSON — Civil & Structural Engineers

PROJECT: THE WORLD TRADE CENTER | TITLE: CONCRETE BEAM SCHEDULE | DATE: 12-18-68

REVISIONS: 8-29-69, 12-12-69

MK.	CONCRETE SECTION W	CONCRETE SECTION D	BOTTOM BARS No.	BOTTOM BARS Size	BOTTOM BARS Type	TOP BARS No.	TOP BARS Size	TOP BARS Type	TOP BARS Location	STIRRUPS Size	STIRRUPS Type	STIRRUPS Spacing each end	REMARKS
B701	24	30	6 2	8 8	A B	4 8	6 9	K K	Left Right	3	⊔	L1½, 10@3, 10@5, 10@7, B@12; R1½, 14@3, 7@4, 6@5, 16@7	* See Sect. J-J on SCX-142 and Sect. T-T on 8-JK8-47
B702	24	30	3 2	9 9	A B	4	6	J	Right	3	⊔	L2, 14@4, 7@5, 14@7, B@12; R3½, 20@7	*
B703	16	20	3 3	6 6	B D	4 5	5 9	J K	Left Right	3	⊓	L4, 12@8, B@12; R3½, 5@7, 12@8	
B704	16	20	3 3	7 7	B D	5	5	J	Right	3	⊓	L3, 11@6, 13@8, B@12; R4, 15@8	
B705	12	See Section C-C on SCX-142											
B706	16	20	6	7	A	4	6	J	Right			See Sect. C-C on SCX-142	See Sect. C-C on SCX-142
B707	18	28	7	7	A	4 4	6 9	K K	Left Right	3	⊓	L3", 1@6, B@12; R4", 5@8	
B708	14	28	5	7	A	4 4	5 5	K J	Left Right	3	⊔	6", B@12	
B709	27	22	2 2	6 9	C D	2	11	P		4	⊔	9@4, 5@8, B@12	* ℓ = 8'
B7010	27	22	2 4	8 11	C D	4	11	P		4	⊔	10@4, 8@8, B@12	* ℓ_1 = 8', ℓ_2 = 10'
B7011	27	22	2 4	9 11	B D	2	10	G	Hook Right	4	⊔	10@4, 8@8, B@12	*
B7012	27	22	2 4	9 11	B D	2	10	L	Hook Left	4	⊔	12@4, 8@8, B@12	*
B7013	27	22	2 2	7 7	C D	4	11	P		4	⊔	10@6, B@12	* ℓ = 10', ℓ_2 = 8'
B7014	27	22	2 2	7 7	C D	4	9	L	Right	4	⊔	12@6, B@12	*
B7014A	27	22	2 2	9 9	C D	4	9	L	Right	4	⊔	8@4, 8@6, B@12	*
B7015	24	24	5	8	A	3 6	6 8	J K	Left Right	4	⊓	1@6, B@12	
B7016	24	24	7	8	A	3	6	J	Right	4	⊔	1@6, B@12	
B7017	24	24	5	8	A	3	6	N		4	⊔	1@6, B@12	

Note:
See 8-JK5-21 for typical beam detail and bar types.
* See 8-JK8-42 for additional beam details.

LICENSED PROFESSIONAL ENGINEER — LESLIE E. ROBERTSON — No. 34360 — UNIVERSITY OF THE STATE OF NEW YORK

DRAWN S.C.
REVIEWED J.M. & E.L.

8-JK5-22.70

WORTHINGTON, SKILLING, HELLE & JACKSON — Civil & Structural Engineers

PROJECT THE WORLD TRADE CENTER | TITLE CONCRETE BEAM SCHEDULE | DATE 8-29-69

REVISIONS

3-6-70

MK	CONCRETE SECTION W	CONCRETE SECTION D	BOTTOM BARS No.	BOTTOM BARS Size	BOTTOM BARS Type	TOP BARS No.	TOP BARS Size	TOP BARS Type	TOP BARS Location	STIRRUPS Size	STIRRUPS Type	STIRRUPS Spacing each end	REMARKS
B711	27	22	2 2	9 9	C D	4	9	L	Right	4	⊔	10@6, B@12	*
B712	27	22	2 2	9 9	C D	2	9	K	Right	4	⊔	10@6, B@12	*
B713	27	22	2 2	7 7	C D	2 2	9 9	K P	Right	4	⊓	10@6, B@12	* l_1=5'-0", l_2=6'-0"
B714	27	22	2 2	10 10	B D	2	11	K	Right	4	⊔	8@4, 8@8, B@12	*
B715	27	22	2 2	9 9	B D	2 4	11 9	K L	Left Right	4	⊔	10@6, B@12	* See 8-JK8-47.15
B716	27	22	2 2	9 9	C D	2	9	L	Right	4	⊔	10@6, B@12	*
B717	27	22	2 2	7 7	B D	2	9	H		4	⊔	1@6, B@12	*

Note:
See 8-JK5-21 for typical beam detail and bar types.
* See 8-JK8-42 for additional beam details.

LICENSED PROFESSIONAL ENGINEER
LESLIE E. ROBERTSON
No. 34360
UNIVERSITY OF THE STATE OF NEW YORK

DRAWN S.C.
REVIEWED E.L.

8-JK5-22.71

WORTHINGTON, SKILLING, HELLE & JACKSON — Civil & Structural Engineers

PROJECT THE WORLD TRADE CENTER | TITLE CONCRETE BEAM SCHEDULE | DATE 3-16-70

REVISIONS

MK.	CONCRETE SECTION W.	CONCRETE SECTION D	BOTTOM BARS No.	BOTTOM BARS Size	BOTTOM BARS Type	TOP BARS No.	TOP BARS Size	TOP BARS Type	TOP BARS Location	STIRRUPS Size	STIRRUPS Type	STIRRUPS Spacing each end	REMARKS
B731	27	22	2 2	7 7	B C	2	9	P		#4	U	6" bal @12"	P1=3'0" P2=5'0"
B732	27	22	2 2	7 7	C D	2	10	K	Right	#4	U	12@6 bal @12	
B733	27	22	2 2	7 7	C D	2	10	K	Right	#4	U	12@6 bal @12	
B734	27	22	2 2	7 7	C D	2	10	K	Right	#4	U	12@6 bal @12	
B735	27	22	2 2	7 7	C D	2 2	10 10	K L	Right	#4	U	12@6 bal @12	
B736	27	22	2 2	11 11	C D	4	10	K	Right	#4	U	12@6, 8@8 bal @12	
B737	27	22	2 2	9 9	C D	2	9	J	Right	#4	U	12@6 bal @12	

Note:
See 8-JK5-21 for typical beam detail and bar types.
See 8-JK8-42 for additional beam details.

LESLIE E. ROBERTSON LICENSED PROFESSIONAL ENGINEER No. 34360 UNIVERSITY OF THE STATE OF NEW YORK

DRAWN S.C.
REVIEWED E.E.

8-JK5-22.73

WORTHINGTON-SKILLING-HELLE & JACKSON — Civil & Structural Engineers

PROJECT THE WORLD TRADE CENTER | TITLE CONCRETE BEAM SCHEDULE | DATE 12-18-68

REVISIONS

MK	CONCRETE SECTION W	CONCRETE SECTION D	BOTTOM BARS No.	BOTTOM BARS Size	BOTTOM BARS Type	TOP BARS No.	TOP BARS Size	TOP BARS Type	TOP BARS Location	STIRRUPS Size	STIRRUPS Type	STIRRUPS Spacing each end	REMARKS
B791	27	22	2-2	7-7	B-D	2-2	9-9	G-L	Left-Right	4	⊔	10@3, 8@6, B@12	
B792	27	22	2-2	7-7	C-D	2-2	9-9	K-L	Right	4		10@3, 8@6, B@12	
B793	27	22	2-2	7-7	C-D	4	9	L	Right	4		8@4, 4@8, B@12	
B794	27	22	2-2	7-7	C-D	2	10	L	Right	4		8@4, 4@8, B@12	
B795	27	22	2-2	9-7	C-D	2-2	11-10	P-L	Right	4		10@3, 8@6, B@12	1-8'
B796	27	22	2-2	9-7	C-D	2	10	L	Right	4		10@3, 8@6, B@12	
B797	27	22	2-2	7-2	B-D	2	9	J	Right	4		8@4, 4@8, B@12	

Note:
See 8-JKS-21 & 8-JKS-42 for typical beam detail and bar types.

LICENSED PROFESSIONAL ENGINEER — LESLIE E. ROBERTSON — No. 34360 — UNIVERSITY OF THE STATE OF NEW YORK

DRAWN S.C.
REVIEWED J.M. & E.L.

8-JKS-22.79

REVISIONS

WORTHINGTON, SKILLING, HELLE & JACKSON — Civil & Structural Engineers

PROJECT THE WORLD TRADE CENTER

TITLE CONCRETE BEAM SCHEDULE

DATE 12-18-68

MK	CONCRETE SECTION W	CONCRETE SECTION D	BOTTOM BARS No.	BOTTOM BARS Size	BOTTOM BARS Type	TOP BARS No.	TOP BARS Size	TOP BARS Type	TOP BARS Location	STIRRUPS Size	STIRRUPS Type	STIRRUPS Spacing each end	REMARKS
B811	27	26	2	11	B	2	9	J	Left	4	⊓	20@3, 10@6, 8@12	F=8' l1=20', l2=10'
			4	11	C	4	11	P	—	4	⊓	10@4, 7@8, 8@12	
			2	11	D	2	11	P	Right	4	⊓	8@4, 5@8, 8@12	
B812	27	26	2	11	B	2	9	J					
B813	27	26	2	11	B	2	9	J					

Note:
See B-JK5-21 & B-JK8-42 for typical beam detail and bar types.

B-JK5-22.81

LICENSED PROFESSIONAL ENGINEER
LESLIE E. ROBERTSON
No. 24360
UNIVERSITY OF THE STATE OF NEW YORK

Drawn

WORTHINGTON, SKILLING, HELLE & JACKSON — Civil & Structural Enginoors

PROJECT: THE WORLD TRADE CENTER | TITLE: CONCRETE BEAM SCHEDULE | DATE: 12-18-66

REVISIONS

MK	CONCRETE SECTION W	CONCRETE SECTION D	BOTTOM BARS No.	BOTTOM BARS Size	BOTTOM BARS Type	TOP BARS No.	TOP BARS Size	TOP BARS Type	TOP BARS Location	STIRRUPS Size	STIRRUPS Type	STIRRUPS Spacing each end	REMARKS
B831	27	22	2 2	7 7	B D	2 2	6 9	G L	Left Right	4	U	8@6, 8@12	
B832	27	22	2 2	7 7	C D	2 2	6 9	K L	Right	4	U	8@6, 8@12	
B833	27	22	2 2	7 7	C D	—	—	—	—	4	U	8@6, 8@12	

Note:
See 8-JK5-21 & 8-JK8-42 for typical beam detail and bar types.

LICENSED PROFESSIONAL ENGINEER — LESLIE E. ROBERTSON — No. 34360 — THE STATE OF NEW YORK

Drawn S.C.
Reviewed J.M.L. E.L.

8-JK5-22.83

WORTHINGTON, SKILLING, HELLE & JACKSON — Civil & Structural Engineers

PROJECT: THE WORLD TRADE CENTER | TITLE: CONCRETE BEAM SCHEDULE | DATE: 12-18-68

REVISIONS
9-3-69
11-7-69

MK	CONCRETE SECTION W	CONCRETE SECTION D	BOTTOM BARS No.	BOTTOM BARS Size	BOTTOM BARS Type	TOP BARS No.	TOP BARS Size	TOP BARS Type	TOP BARS Location	STIRRUPS Size	STIRRUPS Type	STIRRUPS Spacing each end	REMARKS
B851	27	22	2 2	7 7	C D	4	9	P	—	4	⊔	8@6, B@12	*1=10'
B852	27	22	2 2	7 7	C D	2	9	L	Right	4	⊔	8@4, 6@8, B@12	*
B853	27	22	2 4	9 11	C D	4 2	11 9	P L	— Right	4	⊓	14@3, 10@6, B@12	*1=8'
B854	27	22	2 4	9 11	B D	2 2	11 11	G K	— Right	4	⊔	14@4, 7@8, B@12	*
B855	27	22	2 2	9 8	A D	4	11	N	—	4	⊓	10@6, B@12	*
B856	27	22	2 4	9 11	B D	4 2	11 10	K L	Left Right	4	⊔	14@4, 7@8, B@12	*
B857	27	22	2 2	7 7	C D	4	11	P	—	4	⊓	8@6, B@12	*1=8', *2=8'
B857A	27	22	2 2	7 7	B D	4	10	K	Right	4	⊔	8@6, B@12	*
B858	24	24	5	8	A	3 6	6 8	J K	Left Right	4	⊓	1@6, B@12	
B859	24	24	7	8	A	3	6	J	Right	4	⊓	1@6, B@12	
B8510	24	24	5	8	A	3	6	N	—	4	⊓	1@6, B@12	

* See detail on 8-1K8-46.10

Note:
See 8-JK5-21 for typical beam detail and bar types.
* See 8-JK8-42 for additional beam details.

LICENSED PROFESSIONAL ENGINEER — LESLIE E. ROBERTSON — No. 34360 — UNIVERSITY OF THE STATE OF NEW YORK

Drawn S.C.V.
Revised J.M.S.

8-JK5-22.85

REVISIONS

THE WORLD TRADE CENTER

LESLIE E. ROBERTSON — Civil & Structural Engineers

TITLE CONCRETE BEAM SCHEDULE

DATE 3-19-70

MK.	CONCRETE SECTION W.	CONCRETE SECTION D	BOTTOM BARS No.	BOTTOM BARS Size	BOTTOM BARS Type	TOP BARS No.	TOP BARS Size	TOP BARS Type	TOP BARS Location	STIRRUPS Size	STIRRUPS Type	STIRRUPS Spacing each end	REMARKS
B 87.1	27	22	2-2	9-9	B-D	2-2	11-9	K-L	Left-Right	4	⊔	10@6, 8@12	
B 87.2	27	22	2-2	9-9	C-D	2-2	9-9	E-L	Right	4	⊔	10@6, 8@12	
B 87.3	27	22	2-2	9-9	C-D					4	⊔	10@6, 8@12	

Note:
1.-See 8-JK5-21 for typical beam detail and bar types.
2.-See 8-JK8-42 for adithonal beam details.

LICENSED PROFESSIONAL ENGINEER — LESLIE E. ROBERTSON — No. 34360 — COMMONWEALTH OF THE STATE OF NEW YORK

DRAWN V.H.A.

REVIEWED T.O.

8-JK5-22.02

WORTHINGTON, SKILLING, HELLE & JACKSON Civil & Structural Engineers

PROJECT THE WORLD TRADE CENTER | TITLE CONCRETE BEAM SCHEDULE | DATE 3-19-70

REVISIONS

MK	CONCRETE SECTION W	CONCRETE SECTION D	BOTTOM BARS No.	BOTTOM BARS Size	BOTTOM BARS Type	TOP BARS No.	TOP BARS Size	TOP BARS Type	TOP BARS Location	STIRRUPS Size	STIRRUPS Type	STIRRUPS Spacing each end	REMARKS
B891	27	22	2-2	9-9	C-D	4-4	9-9	K-K	Left Right	#4	U	6@6, 4@8, 8@12	
B892	27	22	2-2	9-9	C-D	2-2	9-9	K-L	Right	#4	U	6@6, 4@8, 8@12	
B893	27	22	2-2	9-9	C-D	2-2	9-9	K-L	Right	#4	U	6@6, 4@8, 8@12	
B894	27	22	2-2	9-9	C-D	2-2	9-9	K-L	Right	#4	U	6@6, 4@8, 8@12	
B895	27	22	2-2	9-9	C-D	2-2	9-9	K-L	Right	#4	U	6@6, 4@8, 8@12	
B896	27	22	2-2	9-9	C-D	2-2	9-9	K-L	Right	#4	U	6@6, 4@8, 8@12	
B897	27	22	2-2	9-9	C-D	2-2	9-9	K-L	Right	#4	U	6@6, 4@8, 8@12	
B898	27	22	2-2	9-9	C-D	2-2	10-10	K-L	Right	#4	U	6@6, 4@8, 8@12	
B899	27	22	2-2	11-11	C-D	2-2	10-10	K-L	Right	#4	U	12@4, 8@8, 8@12	
B8910	27	22	2-2	9-9	C-D	2-2	9-9	J	Right	#4	U	12@6, 8@12	

Note:
1.-See 8-JKS-21 for typical beam detail and bar types.
2.-See 8-JK8-42 for additional beam details.

LICENSED PROFESSIONAL ENGINEER
LESLIE E. ROBERTSON
No. 84360
UNIVERSITY OF THE STATE OF NEW YORK

DRAWN S.C.
REVIEWED E.L.

8-JK5-22.89

WORTHINGTON, SKILLING, HELLE & JACKSON — Civil & Structural Engineers

PROJECT THE WORLD TRADE CENTER | TITLE CONCRETE FIREPROOFING DETAIL | DATE 8-23-68

REVISIONS

12-18-68

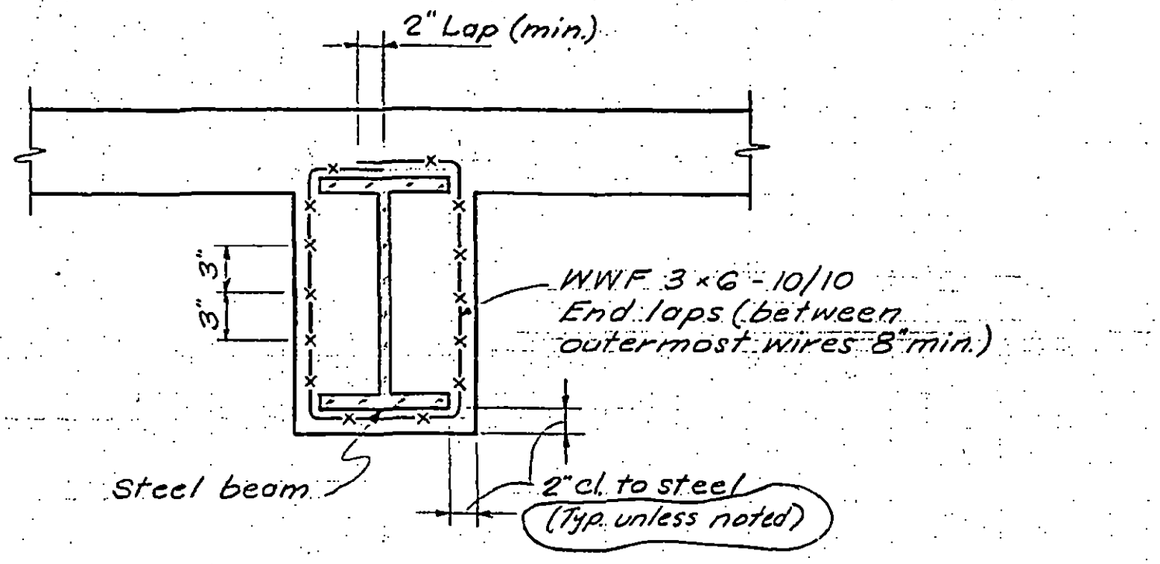

Note: Upset beam similar unless noted.

NOTES:

1. This detail applies to all beams with the symbol (CFP) as shown on plans.
2. See also Arch'tl. Dwgs. and details for other beams requiring concrete encasement.

LICENSED PROFESSIONAL ENGINEER — LESLIE E. ROBERTSON — No. 34360 — THE STATE OF NEW YORK

DRAWN S.C.

REVIEWED J.M. & E.L.

8-JK5-23

WTI-1073-ECA